Sanitized Copy Approved for Release 2011/02/18 : CIA-RDP82-00038R001700250001-7

7/12

INFORMATION REPORT INFORMATION REPORT

CENTRAL INTELLIGENCE AGENCY

A Proc.
B-Lyc

This material contains information affecting the National Defense of the United States within the meaning of the Espionage Laws, Title 18, U.S.C. Secs. 793 and 794, the transmission or revelation of which in any manner to an unauthorized person is prohibited by law.

50X1-HUM

19 JUL 1965

S-E-C-R-E-T
NO FOREIGN DISSEM

14177-43

COUNTRY USSR

REPORT

SUBJECT Album of Drawings for the MIG-21F-13 Aircraft

DATE DISTR. 7 July 1965

NO. PAGES 1

REFERENCES

50X1-HUM

DATE OF INFO.

PLACE & DATE ACQ.

50X1-HUM

50X1-HUM

Soviet English-language manual on the MIG-21F-13, entitled Aircraft Ye-6T, Technical Description, Book III, Construction (Album of Drawings). The book consists of 237 figures. No publishing data are given. Figures one, two, and three are missing from the text.

50X1-HUM

50X1-HUM

50X1-HUM

50X1-HUM

50X1-HUM

5 4 3 2 1

S-E-C-R-E-T
NO FOREIGN DISSEM

GROUP 1
Excluded from automatic downgrading and declassification

5 4 3 2 1

STATE	DIA	ARMY	NAVY	AIR	NSA	XX NIC	OCR
					Air/FTD	SAC	

(Note: Field distribution indicated by "#".)

INFORMATION REPORT INFORMATION REPORT

Sanitized Copy Approved for Release 2011/02/18 : CIA-RDP82-00038R001700250001-7

Sanitized Copy Approved for Release 2011/02/18 : CIA-RDP82-00038R001700250001-7

SECRET
NO FOREIGN DISSEM

50X1-HUM

AIRCRAFT Ye6T
TECHNICAL DESCRIPTION
Book III
CONSTRUCTION
(Album of Drawings)

SECRET
NO FOREIGN DISSEM

Sanitized Copy Approved for Release 2011/02/18 : CIA-RDP82-00038R001700250001-7

Sanitized Copy Approved for Release 2011/02/18 : CIA-RDP82-00038R001700250001-7

SECRET
NO FOREIGN DISSEM

50X1-HUM

AIRCRAFT E6T
TECHNICAL DESCRIPTION
BOOK III
Construction
(Album of Drawings)

SECRET
NO FOREIGN DISSEM

Sanitized Copy Approved for Release 2011/02/18 : CIA-RDP82-00038R001700250001-7

Sanitized Copy Approved for Release 2011/02/18 : CIA-RDP82-00038R001700250001-7

50X1-HUM

SECRET
NO FOREIGN DISSEM

AIRCRAFT E6T
TECHNICAL DESCRIPTION
BOOK III
Construction
(Album of Drawings)

SECRET
NO FOREIGN DISSEM

Sanitized Copy Approved for Release 2011/02/18 : CIA-RDP82-00038R001700250001-7

Sanitized Copy Approved for Release 2011/02/18 : CIA-RDP82-00038R001700250001-7

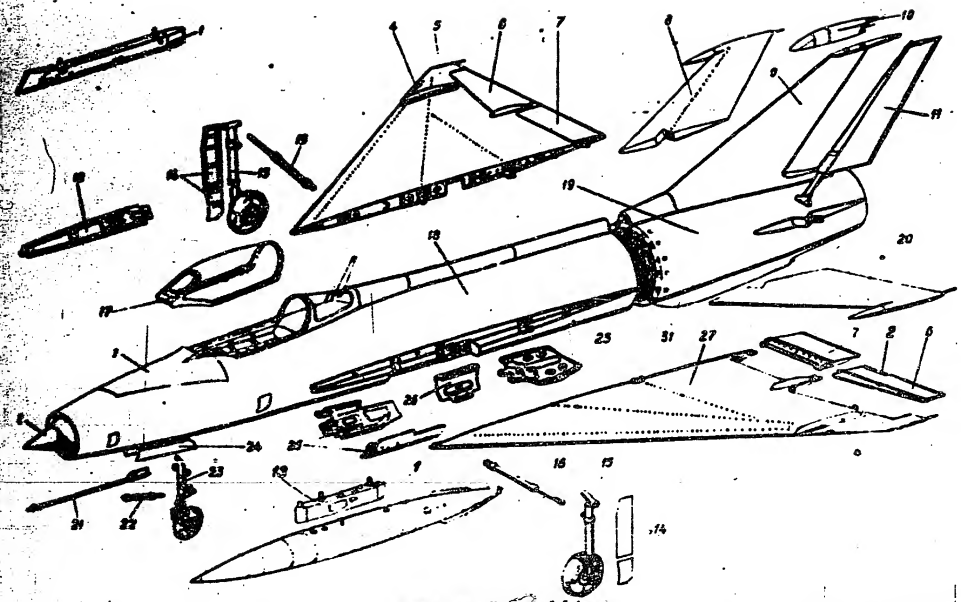

Fig.4. Aircraft Structural Joints

1 – drop tank; 2 – wing tank; 3 – ventral fin; 4 – wing stall fence; 5 – right wing panel; 6 – aileron; 7 – flap; 8 – right half of horizontal stabilizer; 9 – fin; 10 – fin tip; 11 – rudder; 12 – fairing; 13 – pylon; 14 – main wheel strut doors; 15 – landing gear main strut; 16 – landing gear main strut actuating cylinder; 17 – canopy; 18 – fuselage nose section; 19 – fuselage tail section; 20 – left half of horizontal stabilizer; 21 – Pitot-static tube; 22 – landing gear nose strut actuating cylinder; 23 – landing gear nose strut; 24 – nose strut doors; 25 – air brakes; 26 – main wheel well door on fuselage; 27 – left wing panel.

SECRET
NO FOREIGN DISSEM

50X1-HUM

Sanitized Copy Approved for Release 2011/02/18 : CIA-RDP82-00038R001700250001-7

Sanitized Copy Approved for Release 2011/02/18 : CIA-RDP82-00038R001700250001-7

SECRET
NO FOREIGN DISSEM

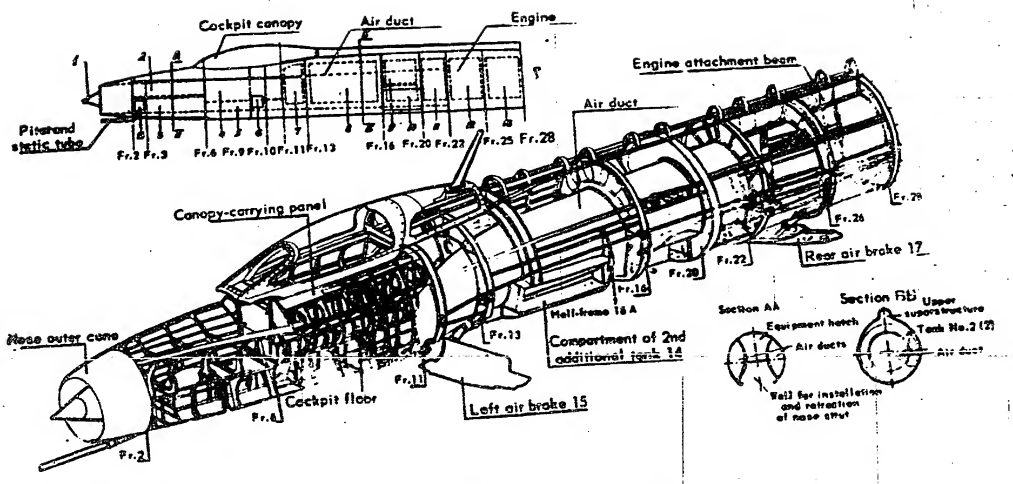

Fig.5. Fuselage Nose Section Structural Details

SECRET
NO FOREIGN DISSEM

50X1-HUM

Sanitized Copy Approved for Release 2011/02/18 : CIA-RDP82-00038R001700250001-7

Sanitized Copy Approved for Release 2011/02/18 : CIA-RDP82-00038R001700250001-7

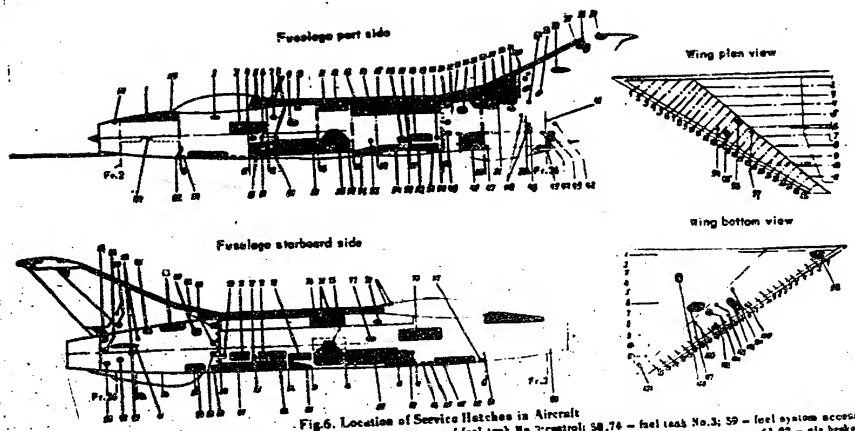

Fig.6. Location of Service Hatches in Aircraft

1 – radio equipment; 2 – "Boring opened canopy assist ground safety pin into canopy emergency handle"; 3,79 – electrical equipment; 4 – hatch for assembly; 5 – fuel system cables; 6 – reduction valve for oxygen supply; 7 – inspection of cartridge bolt; 8 – silicon bell-crank; 9 – wing tank connection; 10 – tank filler; 11 – float valve and low level warning units; 12,93 – fuel tanks venting and circuit control; 13 – gasoline filler; 14 – tank filler; 15 – fuel tanks 4,5 and tpld.92,96,97 – engine accessories; 17,72 – engine attachment fittings; 18 – engine and hydraulic system accessories; 19 – fuel tanks venting and control elements; 20 – connecting servo system pumps 22 – hydraulic reservoir filler; 23 – fuel line connection; 23 – automatic transmission radio controller АРУ-2Б; 24 – thermocouple; 25 – artificial feel mechanism АРУ-2Б; 26 – hydraulic accumulator of servo system; 27 – pumping unit ПП-27; hydraulic booster and marker-beacon receiver МРП-5611; 28,35,36,37 – attachment fittings of radio wiring; 29,41,65 – aileron control; 30,31,32,33 – rudder control bell-cranks; 34 – induction transmitter ИД-2; 43,64 – jet nozzle connecting cylinder; 63 – hydraulic pipe of jet nozzle; 44,62 – attachment fittings of aftercooler; 45 – brake chute; 46,91 – lubrication of bearings; 47 – drainage of telescopic joint; 48 – brake cleaner; 49,50 – hydraulic line disconnect valves; 50 – fuselage attachment fittings; 51 – kerosene drains; 52,71 – engine and hydraulic system accessories; 54 – kerosene drains 55 – sediment drain; 56 – fuel and hydraulic system accessories; 57 – pump of fuel tank No.3 control; 58,76 – fuel tank No.3; 59 – fuel system accessories; 60 – fuel line and pipe line of cockpit defroster system; 61,82 – air brake attachment fittings; 62,81 – L.G. strut axle; 63 – rudder bell-crank; 66 – main hydraulic system accumulator; 67 – thermocouple; 70 – connection of ground pump to main hydraulic fuel tank pressurization system; 72 – fuel tank No.3 attachment screws; 76 – charging system; 73 – hydraulic units; 75 – fuel tank No.3 attachment fittings; 78 – inspection of cartridge link of oxygen supply system; 77 – wing tank joint; 78 – inspection of cartridge link connector with latch; 83 – fire extinguishing bottle; 88 – fire detector; 90-3К-68 valve; marker-beacon receiver МРП-5611; 94,97,100,103 – attachment of special missile; 95 – ПУС-46 launching control unit; connector; 96 – L.G. strut axle; 98-non-linear mechanism; 101 – kerosene drain; 102 – rack connector; 106 – aileron bell-crank; 105 – access to wing navigation lights БАПО; 107 – hydraulic booster; 108 – flap cylinder; 109 – place for jack; 110 – destruction button; 111 – alcohol filler; 112 – storage battery hatch; 113 – checking E.M.F. of battery cells; 114 – access to radio-altimeter units РВУ; 115 – ground supply; 116 – access to electric units; 117 – access hole for inspection of L.G. nose strut attachment fittings; 118,119 – inspection holes of control bell-cranks bolts; 120 – access holes for inspection of bolts securing booster; 121 – access to aileron [illegible]; 99 – air bottles.

SECRET
NO FOREIGN DISSEM

50X1-HUM

Sanitized Copy Approved for Release 2011/02/18 : CIA-RDP82-00038R001700250001-7

Sanitized Copy Approved for Release 2011/02/18 : CIA-RDP82-00038R001700250001-7

SECRET
NO FOREIGN DISSEM

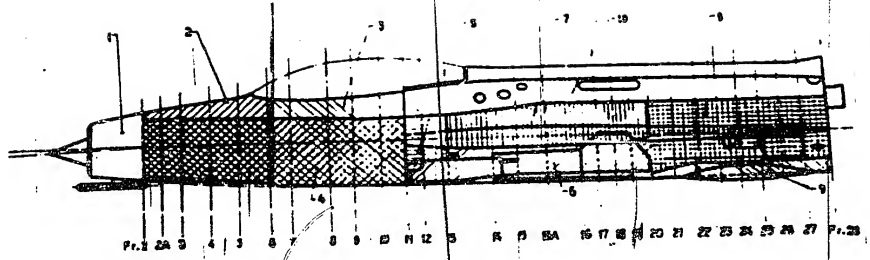

Fig.7. Assembly Compartments of Fuselage Nose Section

1 – nose cone; 2 – nose upper compartment; 3 – compartment between frames 6 and 11; 4 – side panels; 5 – compartment between frames 11 and 18; 6 – bottom panel; 7 – side panels from frame 18 to frame 20; 8 – side panels from frame 20 to frame 28; 9 – bottom panel; 10 – upper panel.

50X1-HUM

SECRET
NO FOREIGN DISSEM

Sanitized Copy Approved for Release 2011/02/18 : CIA-RDP82-00038R001700250001-7

Sanitized Copy Approved for Release 2011/02/18 : CIA-RDP82-00038R001700250001-7

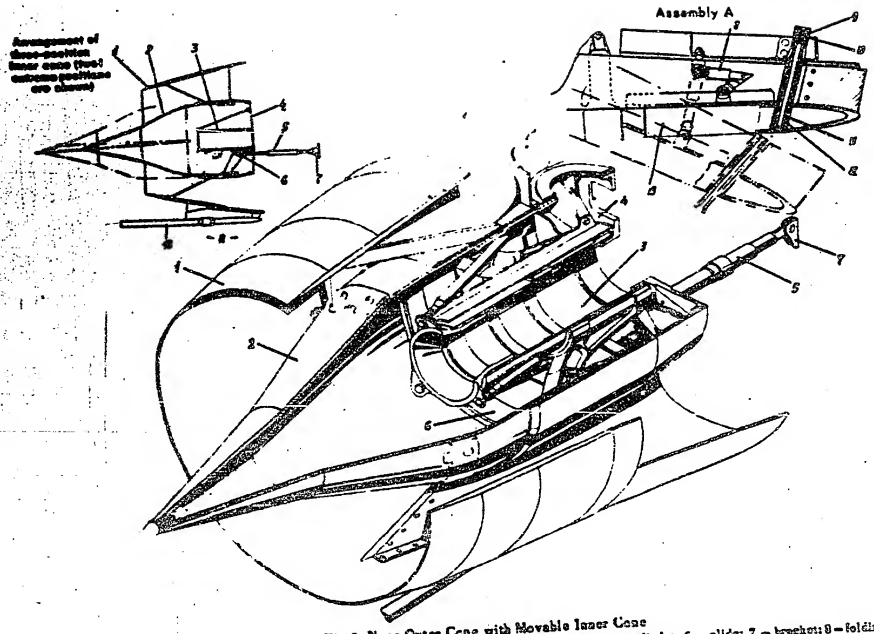

Fig.6. Nose Outer Cone with Movable Inner Cone

1 – nose outer cone; 2 – movable inner cone; 3 – guide tube; 4 – disc; 5 – three-position cylinder; 6 – slider; 7 – bracket; 8 – folding cone; 9 – support; 10 – spring; 11 – self-locking bolt; 12 – bushing; 13 – Pitot and static tube boom.

SECRET
NO FOREIGN DISSEM

SECRET
NO FOREIGN DISSEM

50X1-HUM

POOR ORIGINAL

Sanitized Copy Approved for Release 2011/02/18 : CIA-RDP82-00038R001700250001-7

Sanitized Copy Approved for Release 2011/02/18 : CIA-RDP82-00038R001700250001-7

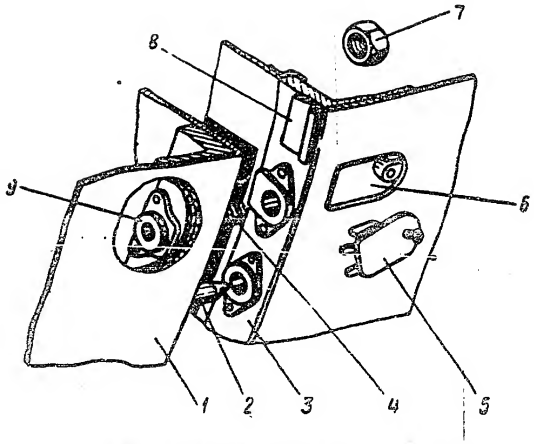

Fig.9. Fuselage Nose-to-Tail Section Joint

1 – frame 28; 2 – locating dowel; 3 – frame 29; 4 – clamp bolt; 5 – cover; 6 – hole; 7 – nut; 8 – rubber-packing; 9 – abutment member.

50X1-HUM

BOOK DOCUMENT

Sanitized Copy Approved for Release 2011/02/18 : CIA-RDP82-00038R001700250001-7

Sanitized Copy Approved for Release 2011/02/18 : CIA-RDP82-00038R001700250001-7

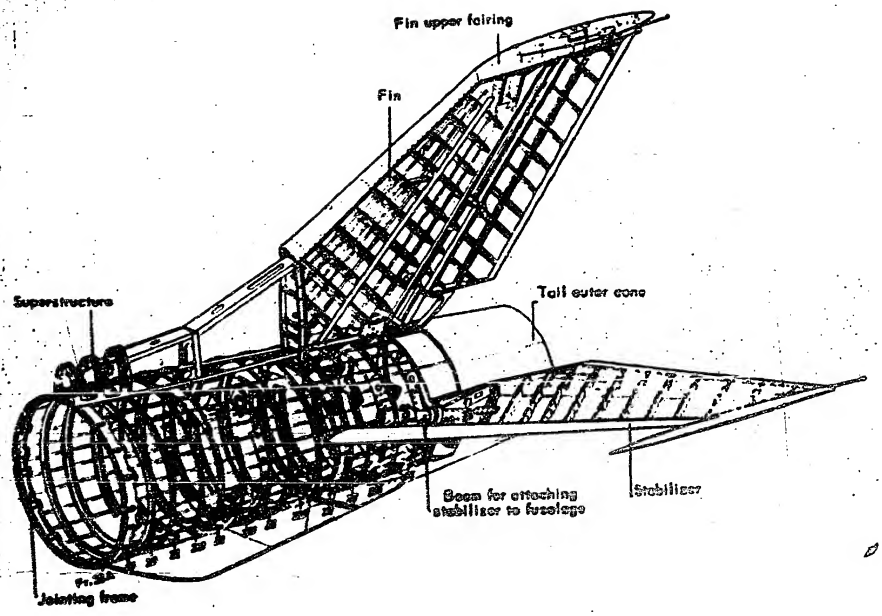

Fig.10. Structural Elements of Fuselage Tail Section and Tail Unit

SECRET
NO FOREIGN DISS.
50X1-HUM

POOR ORIGINAL

Sanitized Copy Approved for Release 2011/02/18 : CIA-RDP82-00038R001700250001-7

Sanitized Copy Approved for Release 2011/02/18 : CIA-RDP82-00038R001700250001-7

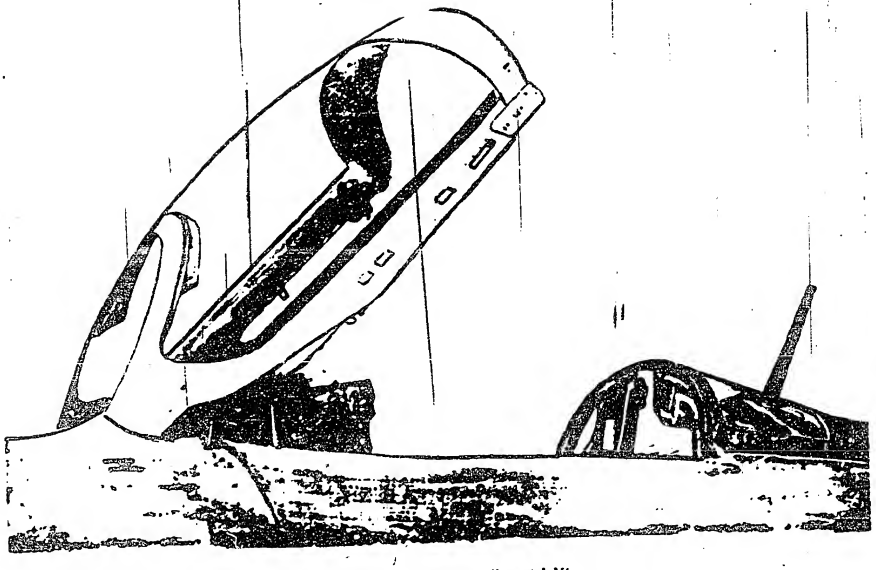

Fig. 11. Cockpit Canopy. General View

50X1-HUM

Sanitized Copy Approved for Release 2011/02/18 : CIA-RDP82-00038R001700250001-7

Sanitized Copy Approved for Release 2011/02/18 : CIA-RDP82-00038R001700250001-7

SECRET
NO FOREIGN DISSEM

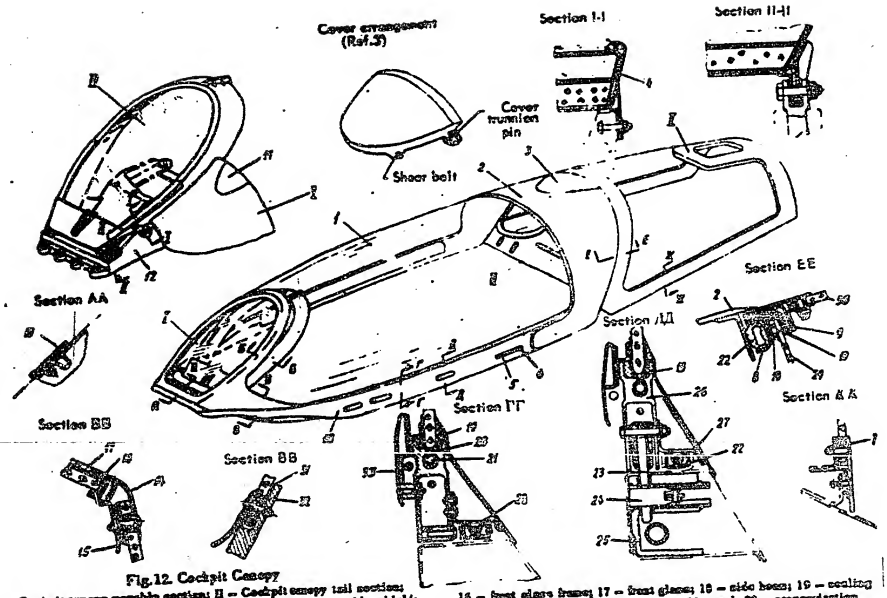

Fig.12. Cockpit Canopy

1 – Cockpit canopy movable section; II – Cockpit canopy tail section; III – Sealed bulkhead; IV – Transparent shield; V – Canopy side shield; 1 – main glass; 2 – rear arch; 3 – cover; 4 – transparent shield frame; 5 – handle for manual opening of canopy; 6 – hatches; 7 – rubber bush-ing; 8 – channel for pressurization hose; 9 – canopy tail section frame; 10 – sealed bulkhead duralumin sheet; 11 – side shield glass; 12 – sight bracket; 13 – de-icer manifold plate; 14 – edging; 15 – inner lining; 16 – front glass frame; 17 – front glass; 18 – side hose; 19 – sealing varnish У-20М-2; 20 – canvas tape; 21 – rod; 22 – pressurization hose; 23 – canopy loop; 24 – operating lockpin; 25 – operating lock; 26 – pressed electrode section; 27 – skin; 28 – duralumin section; 29 – sealed bulkhead glass; 30 – glass; 31 – rubber packing; 32 – bracket; 33 – deflector tube.

50X1-HUM

POOR ORIGINAL

Sanitized Copy Approved for Release 2011/02/18 : CIA-RDP82-00038R001700250001-7

Sanitized Copy Approved for Release 2011/02/18 : CIA-RDP82-00038R001700250001-7

SECRET
NO FOREIGN DISSEM

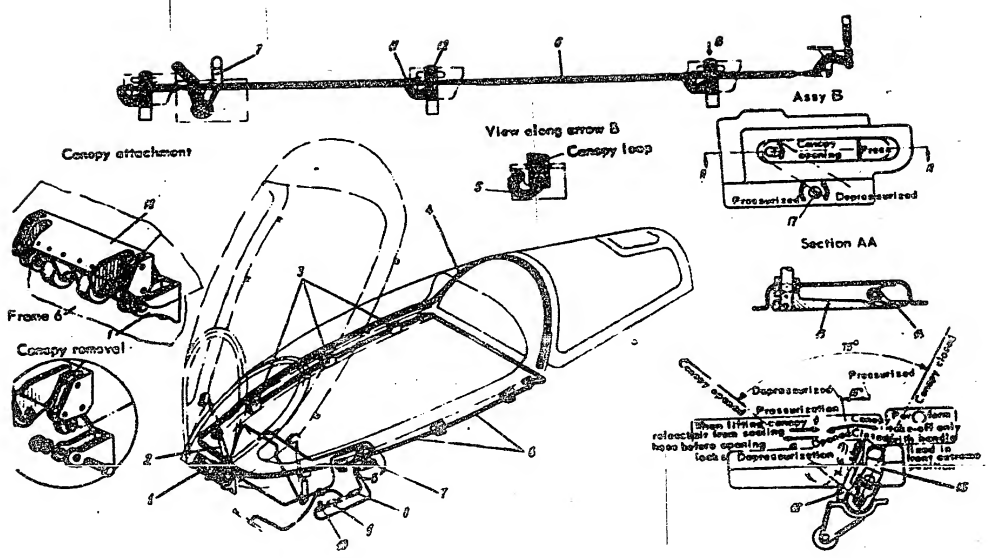

Fig. 13. Canopy Pressurization and Control Systems

1 – canopy mounting bracket; 2 – canopy lifting cylinder; 3 – canopy operating lock; 4 – sealing hose; 5 – stop; 6 – rod; 7 – canopy control two-arm handle; 8 – return valve; 9 – reducer PB-1.5; 10 – air valve; 11 – bell-crank; 12 – pin; 13 – outside arm; 14 – button; 15 – pressurization handle; 16 – inside arm; 17 – slotted shaft for canopy pressurization from outside; 18 – hinge lock.

50X1-HUM

Sanitized Copy Approved for Release 2011/02/18 : CIA-RDP82-00038R001700250001-7

Sanitized Copy Approved for Release 2011/02/18 : CIA-RDP82-00038R001700250001-7

SECRET
NO FOREIGN DISSEM

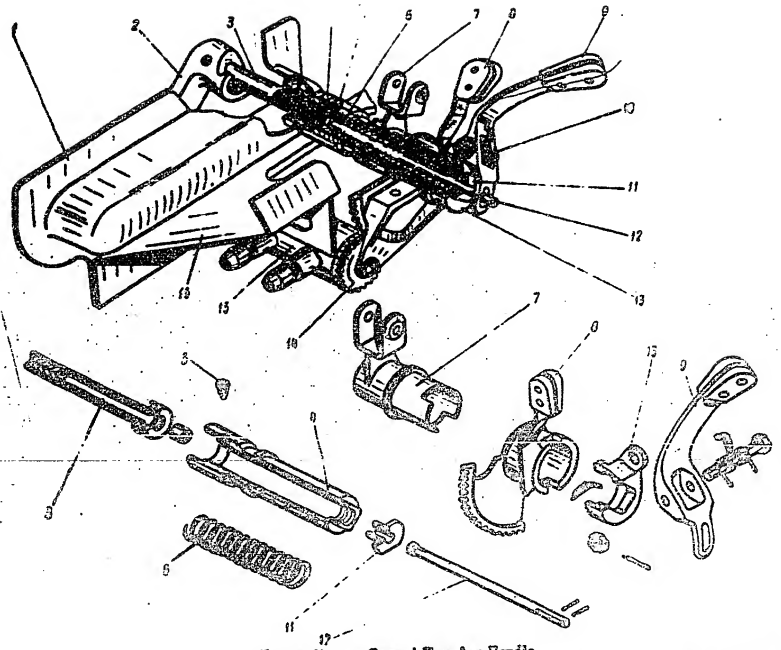

Fig.14. Canopy Control Two-Arm Handle

1 – outside arm bar; 2 – outside arm; 3 – chain; 4 – rod; 5 – screw; 6 – spring; 7 – guide; 8 – pressurization handle; 9 – handle arm; 10 – spring; 11 – seat; 12 – link; 13 – bracket; 14 – gear; 15 – canopy pressurization and control valve; 16 – panel.

SECRET
NO FOREIGN DISSEM

50X1-HUM

POOR ORIGINAL

Sanitized Copy Approved for Release 2011/02/18 : CIA-RDP82-00038R001700250001-7

Sanitized Copy Approved for Release 2011/02/18 : CIA-RDP82-00038R001700250001-7

50X1-HUM

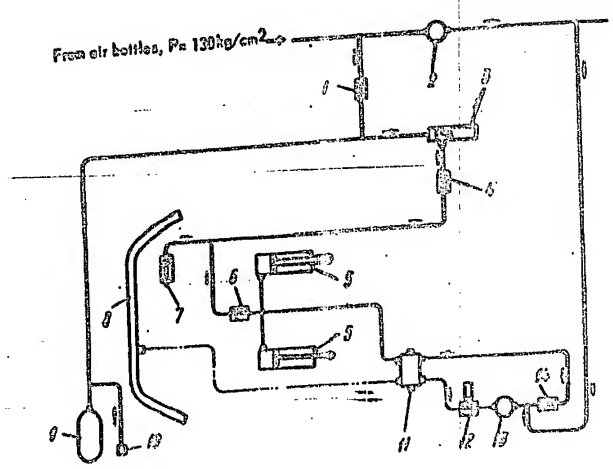

Symbols

Canopy lifting cylinder control system, P=50 kg/cm2

Canopy pressurization system, P = from 1.7 to 2.85 kg/cm2

Canopy emergency cooling system, P = from 110 to 130 kg/cm2

Fig.15. Canopy Air System

1 – non-return valve; 2 – reducer FD-301; 3 – emergency valve; 4 – filter; 5 – canopy lifting cylinders; 6 – non-return valve; 7 – cylinder for opening canopy time delay lock; 8 – cooling hose; 9 – emergency air bottle; 10 – pressure measuring connection; 11 – canopy pressurization and control valve; 12 – safety valve; 13 – reducer FD-3.5; 14 – non-return valve.

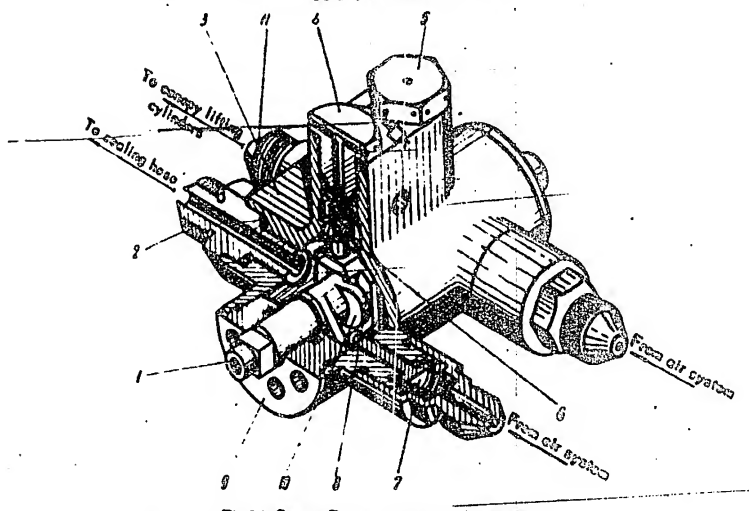

Fig.16. Canopy Pressurization and Control Valve

1 – axis with cams; 2 – connection; 3 – body; 4 – connection; 5 – connection; 6 – valve; 7 – valve; 8 – guides; 9 – cross; 10 – cam; 11 – connection.

Sanitized Copy Approved for Release 2011/02/18 : CIA-RDP82-00038R001700250001-7

Sanitized Copy Approved for Release 2011/02/18 : CIA-RDP82-00038R001700250001-7

SECRET
NO FOREIGN DISSEM

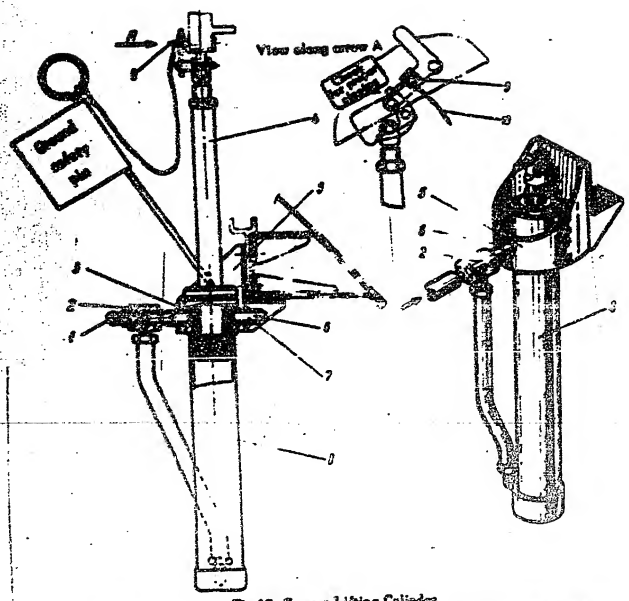

Fig.17. Canopy Lifting Cylinder

1 – connection; 2 – turning connection; 3 – casing; 4 – rod; 5 – cylinder mounting bracket; 6 – locking pin; 7 – pin; 8 – cylinder; 9 – emergency system lock; 10 – cord.

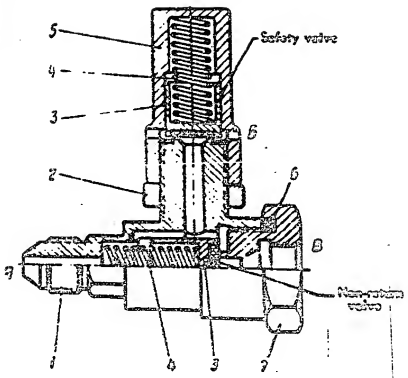

Fig.18. Air Valve

1 – body; 2 – bottom; 3 – slide valve; 4 – spring; 5 – cover; 6 – rubber packing ring; 7 – plug.

50X1-HUM

SECRET
NO FOREIGN DISSEM

POOR ORIGINAL

Sanitized Copy Approved for Release 2011/02/18 : CIA-RDP82-00038R001700250001-7

Sanitized Copy Approved for Release 2011/02/18 : CIA-RDP82-00038R001700250001-7

SECRET
NO FOREIGN DISSEM

Valve in cocked position

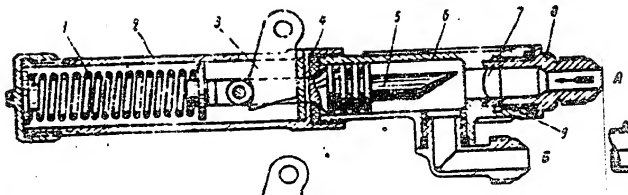

Piercing diaphragm

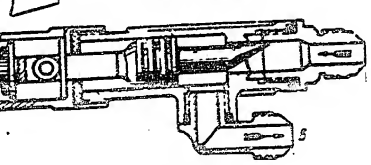

Operation of valve

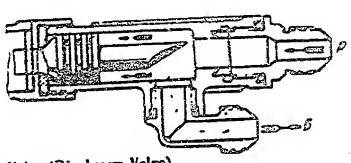

Fig.10. Emergency Valve (Diaphragm Valve)
1 – spring; 2 – tube; 3 – pin; 4 – rubber washer; 5 – striker; 6 – body; 7 – diaphragm; 8 – connection; 9 – bushing.

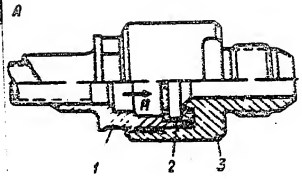

Fig.20. Filter
1 – body; 2 – grid; 3 – cover.

View along arrow A

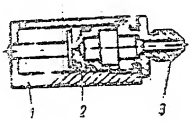

Fig.21 Cylinder for Opening Canopy Time Delay Lock
1 – body; 2 – cell; 3 – cover.

50X1-HUM

POOR ORIGINAL

Sanitized Copy Approved for Release 2011/02/18 : CIA-RDP82-00038R001700250001-7

Sanitized Copy Approved for Release 2011/02/18 : CIA-RDP82-00038R001700250001-7

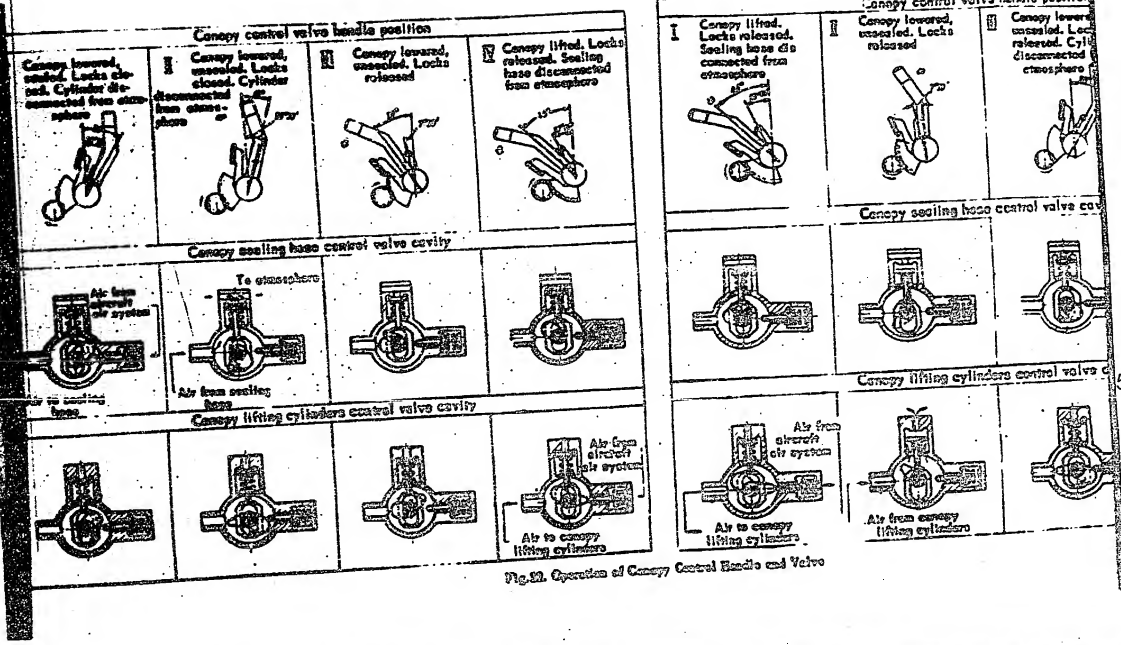

Fig.22. Operation of Canopy Control Handle and Valve

SECRET
NO FOREIGN DISSEM
50X1-HUM
POOR ORIGINAL

Sanitized Copy Approved for Release 2011/02/18 : CIA-RDP82-00038R001700250001-7

Sanitized Copy Approved for Release 2011/02/18 : CIA-RDP82-00038R001700250001-7

SECRET
NO FOREIGN DISSEM

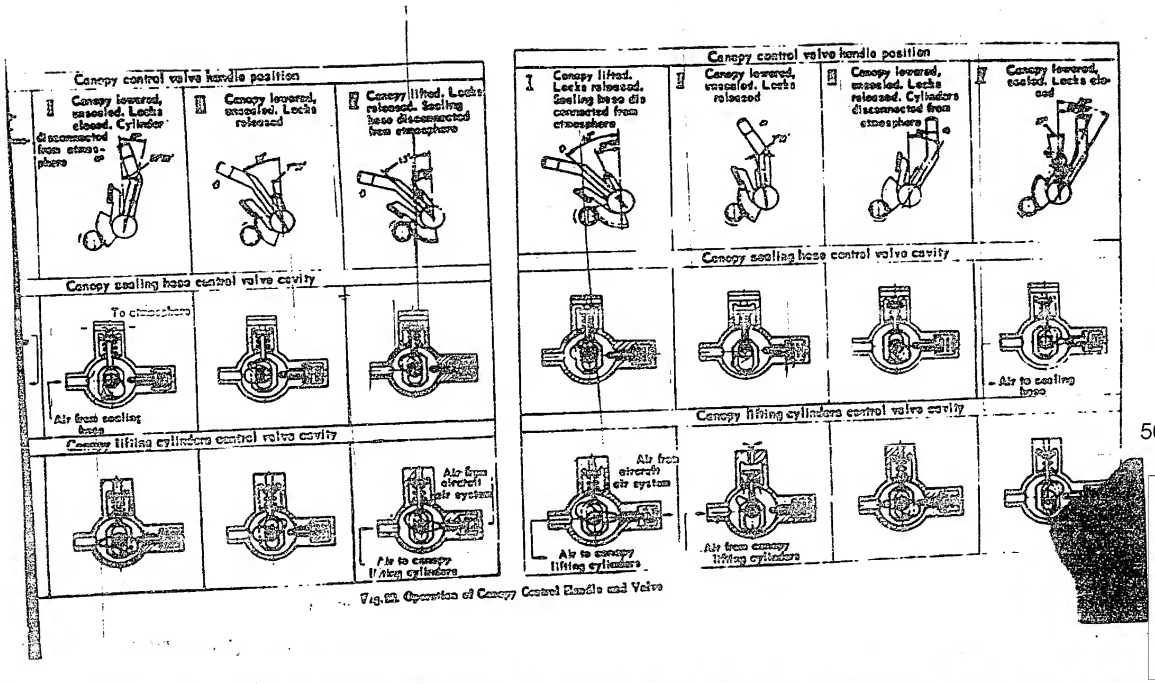

Fig. 21. Operation of Canopy Control Handle and Valve

50X1-HUM

SECRET
NO FOREIGN DISSEM

POOR ORIGINAL

Sanitized Copy Approved for Release 2011/02/18 : CIA-RDP82-00038R001700250001-7

Sanitized Copy Approved for Release 2011/02/18 : CIA-RDP82-00038R001700250001-7

SECRET
NO FOREIGN DISSEM

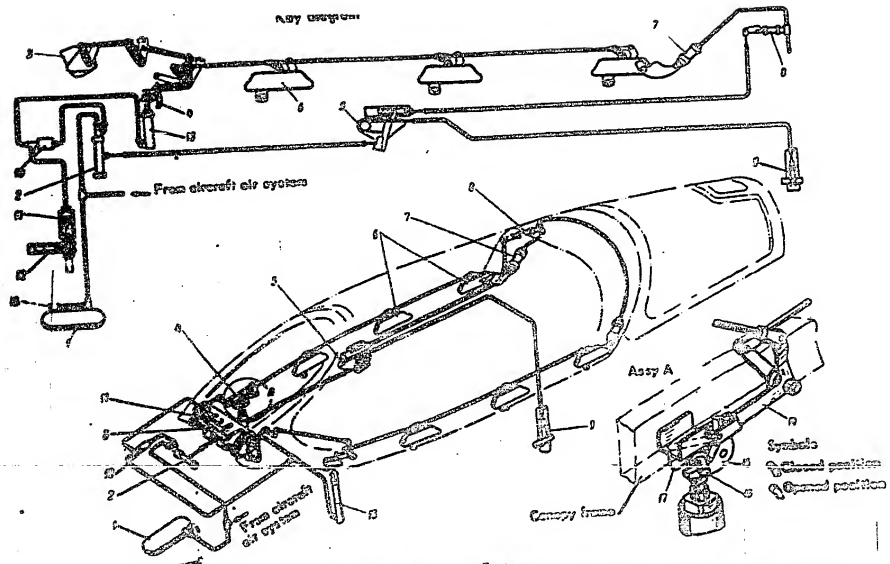

Fig. 23. Canopy Jettison System

1 – emergency air bottle; 2 – emergency valve; 3 – hinge lock; 4 – cylinder and firing lock; 5 – canopy jettison handle; 6 – side emergency locks; 7 – explosive charge actuated cylinder; 8 – canopy jettison gun; 9 – center pin of ejection gun TCB-1200 release valve; 10 – filter; 11 – cylinder for opening canopy time delay lock; 12 – canopy time delay lock; 13 – canopy time cylinder; 14 – bell-crank; 15 – pawl; 16 – shaft; 17 – bracket; 18 – connection for measuring pressure in the canopy emergency system air bottle and for charging during system checking.

SECRET
NO FOREIGN DISSEM

50X1-HUM

POOR ORIGINAL

Sanitized Copy Approved for Release 2011/02/18 : CIA-RDP82-00038R001700250001-7

Sanitized Copy Approved for Release 2011/02/18 : CIA-RDP82-00038R001700250001-7

50X1-HUM

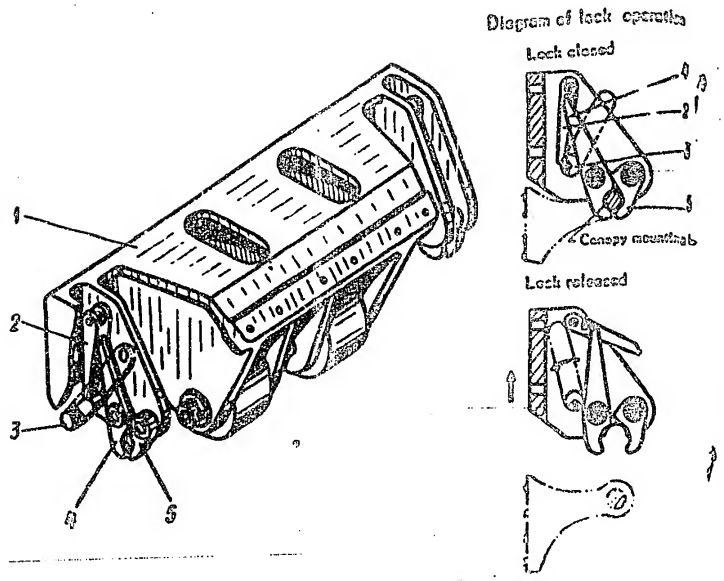

Fig.24. Hinge Lock
1 – housing 2 – pawl; 3 – shaft; 4-5 – grips.

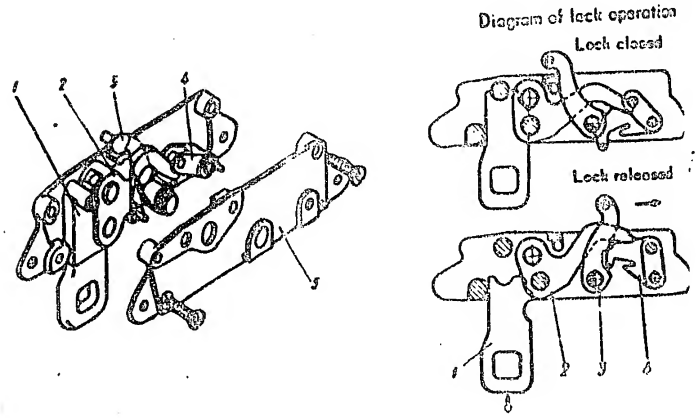

Fig.25. Side Emergency Lock
1 – loop; 2,4 – levers; 3 – bolt-cards; 5 – body.

FOR OFFICIAL USE ONLY

Sanitized Copy Approved for Release 2011/02/18 : CIA-RDP82-00038R001700250001-7

Sanitized Copy Approved for Release 2011/02/18 : CIA-RDP82-00038R001700250001-7

50X1-HUM

POOR ORIGINAL

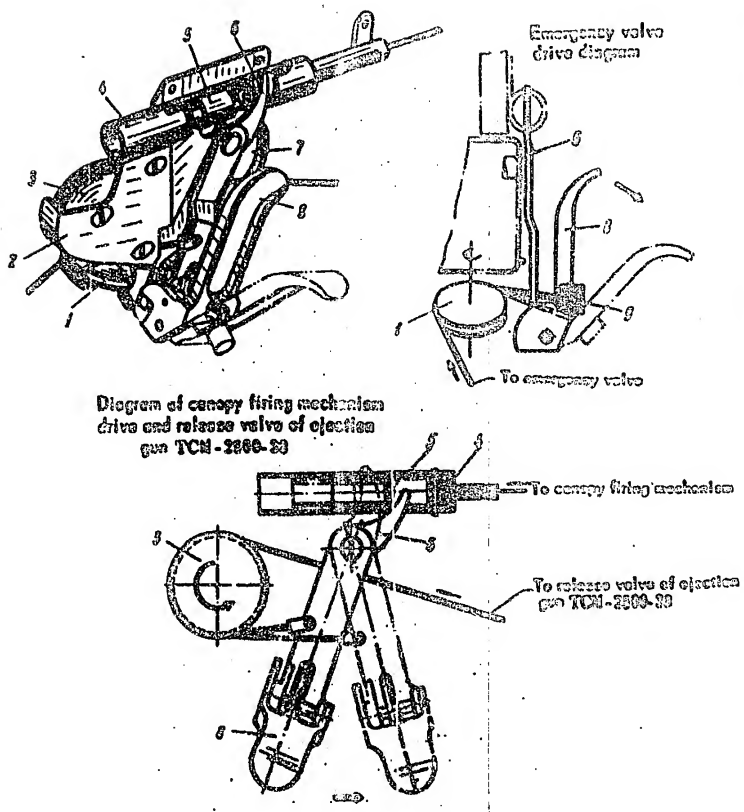

Diagram of canopy firing mechanism drive and release valve of ejection gun TCN-2500-20

Fig.25. Canopy Jettison Handle

1,8 – cables; 2 – cover; 4 – jettison gun drive; 5 – plunger; 6 – lever; 7 – handle; 8 – hinge bracket; 9 – bushing.

Sanitized Copy Approved for Release 2011/02/18 : CIA-RDP82-00038R001700250001-7

Sanitized Copy Approved for Release 2011/02/18 : CIA-RDP82-00038R001700250001-7

50X1-HUM

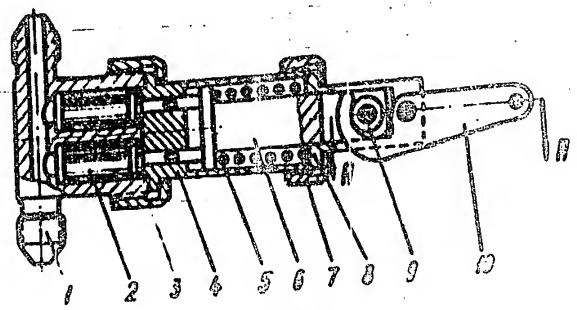

Section AA

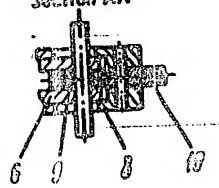

Fig.27. Canopy Jettison Gun
1 – body; 2 – cartridge ПВ-1; 3 – nut; 4 – locking plunger; 5 – spring; 6 – striker; 7 – nut; 8 – sleeve; 9 – roller; 10 – release lever.

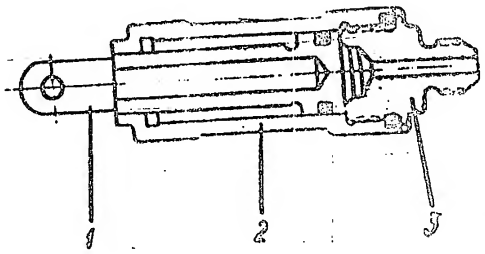

Fig.28. Explosive Charge Actuated Cylinder
1 – rod; 2 – body; 3 – cover.

FOR OFFICIAL USE ONLY

Sanitized Copy Approved for Release 2011/02/18 : CIA-RDP82-00038R001700250001-7

Sanitized Copy Approved for Release 2011/02/18 : CIA-RDP82-00038R001700250001-7

50X1-HUM

POOR ORIGINAL

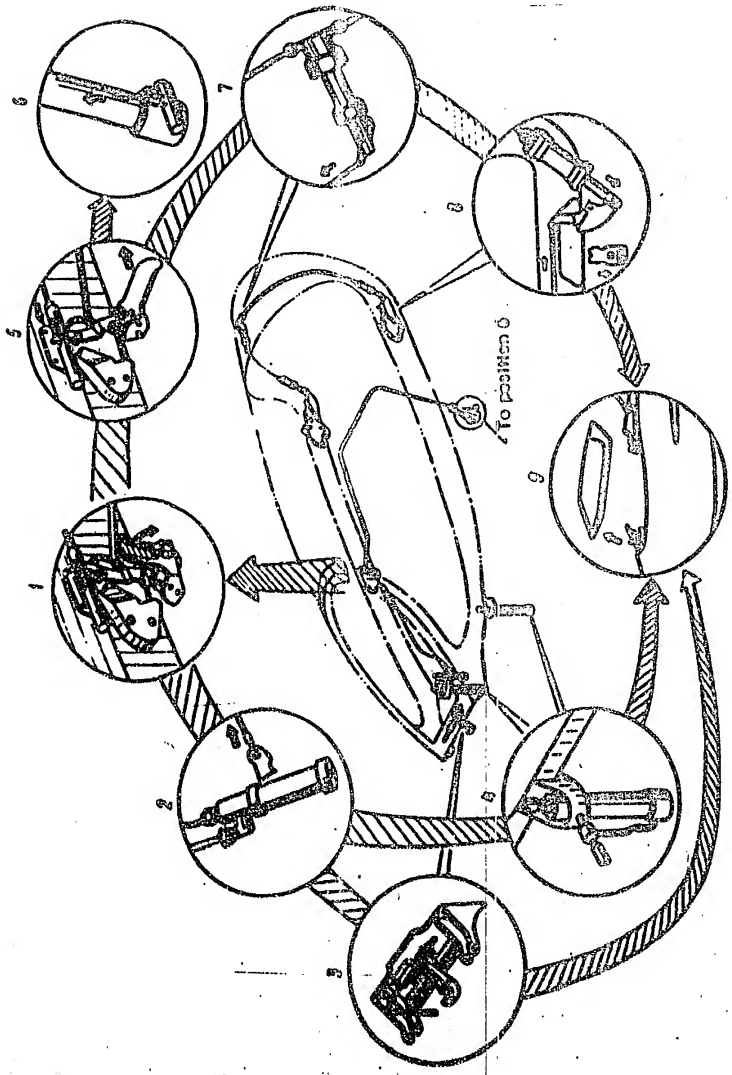

Fig. 20. Diagram of Canopy Jettison System Operation

Sanitized Copy Approved for Release 2011/02/18 : CIA-RDP82-00038R001700250001-7

Sanitized Copy Approved for Release 2011/02/18 : CIA-RDP82-00038R001700250001-7

SECRET
NO FOREIGN DISSEM

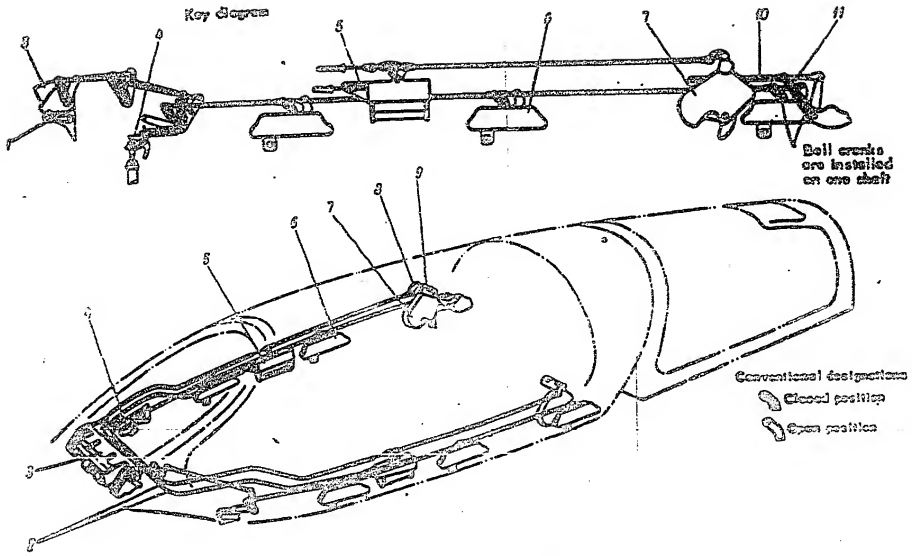

Fig.20. Canopy Retention System

1 – canopy time delay lock; 2 – cable tubes; 3 – hinge lock; 4 – lock for fixing cylinder rod; 5 – front grip lock; 6 – emergency side lock; 7 – rear grip lock; 8 – bell-crank for releasing front grip locks; 9 – release lever for opening front locks; 10 – rear side lock; 11 – bell-crank.

SECRET
NO FOREIGN DISSEM

50X1-HUM

POOR ORIGINAL

Sanitized Copy Approved for Release 2011/02/18 : CIA-RDP82-00038R001700250001-7

Sanitized Copy Approved for Release 2011/02/18 : CIA-RDP82-00038R001700250001-7

SECRET
NO FOREIGN DISSEM

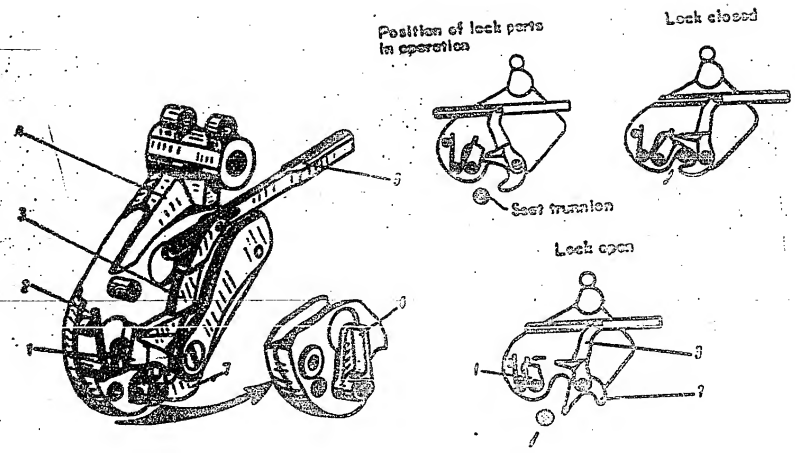

Fig.81. Rear Grip Lock
1 – stops; 2 – springs; 3 – levers; 4 – body; 5 – rod; 6 – pawl; 7 – grip.

50X1-HUM

SECRET
NO FOREIGN DISSEM

POOR ORIGINAL

Sanitized Copy Approved for Release 2011/02/18 : CIA-RDP82-00038R001700250001-7

Sanitized Copy Approved for Release 2011/02/18 : CIA-RDP82-00038R001700250001-7

50X1-HUM

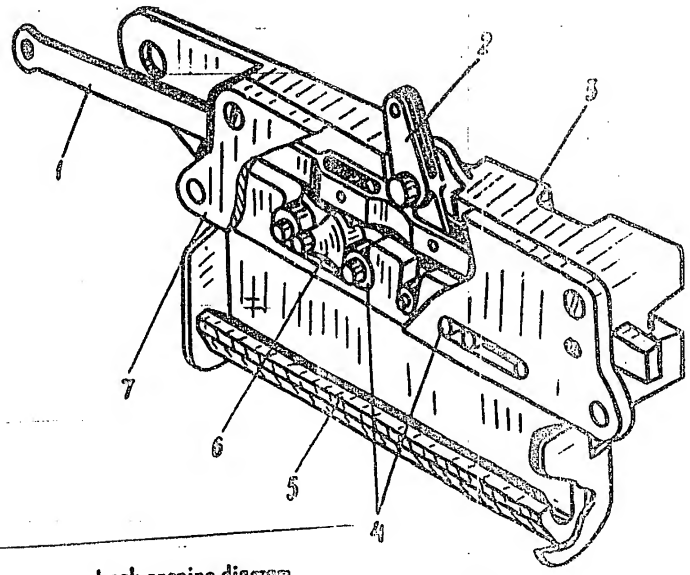

Lock opening diagram

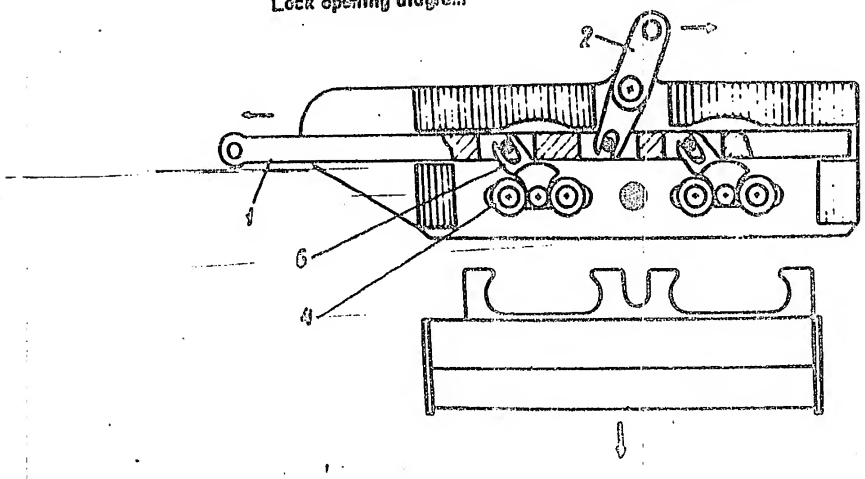

Fig.32. Front Grip Lock

1 – rod; 2 – lever; 3 – body; 4 – roller; 5 – insert; 6 – arm; 7 – body cover.

FOR OFFICIAL USE ONLY

Sanitized Copy Approved for Release 2011/02/18 : CIA-RDP82-00038R001700250001-7

Sanitized Copy Approved for Release 2011/02/18 : CIA-RDP82-00038R001700250001-7

SECRET
NO FOREIGN DISSEM

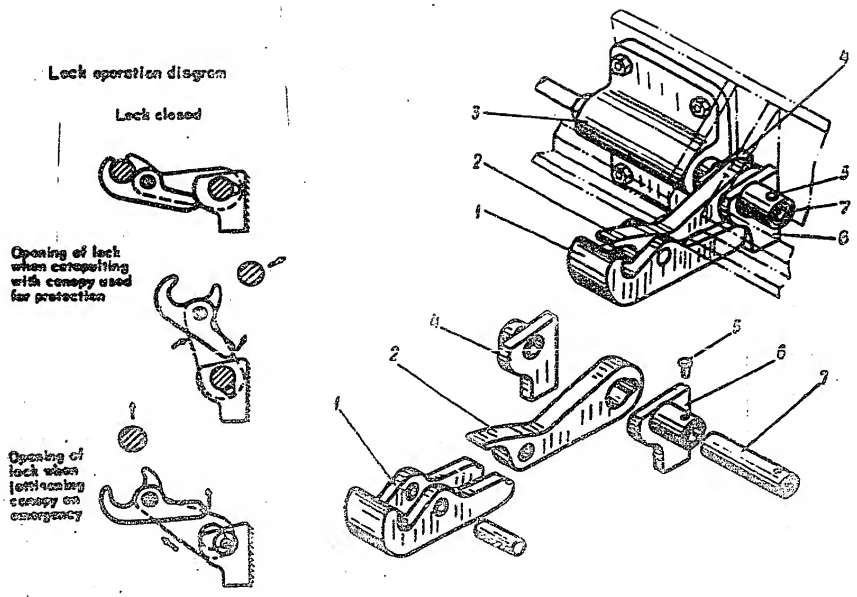

Fig.33. Canopy Time Delay Lock
1 – lever; 2 – shackle; 3 – air cylinder; 4 – bushing; 5 – shear rivet; 6 – bolt; 7 – axis.

SECRET
NO FOREIGN DISSEM

50X1-HUM

POOR ORIGINAL

Sanitized Copy Approved for Release 2011/02/18 : CIA-RDP82-00038R001700250001-7

Sanitized Copy Approved for Release 2011/02/18 : CIA-RDP82-00038R001700250001-7

SECRET
NO FOREIGN DISSEM

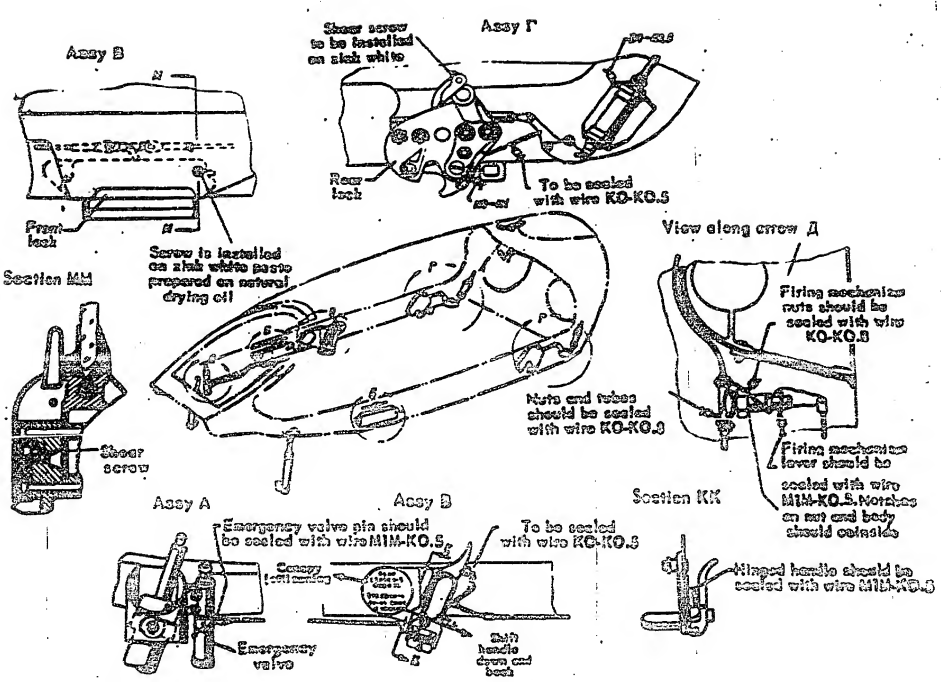

Fig.34. Canopy Locking Diagram

SECRET
NO FOREIGN DISSEM

50X1-HUM

POOR ORIGINAL

Sanitized Copy Approved for Release 2011/02/18 : CIA-RDP82-00038R001700250001-7

Sanitized Copy Approved for Release 2011/02/18 : CIA-RDP82-00038R001700250001-7

SECRET
NO FOREIGN DISSEM

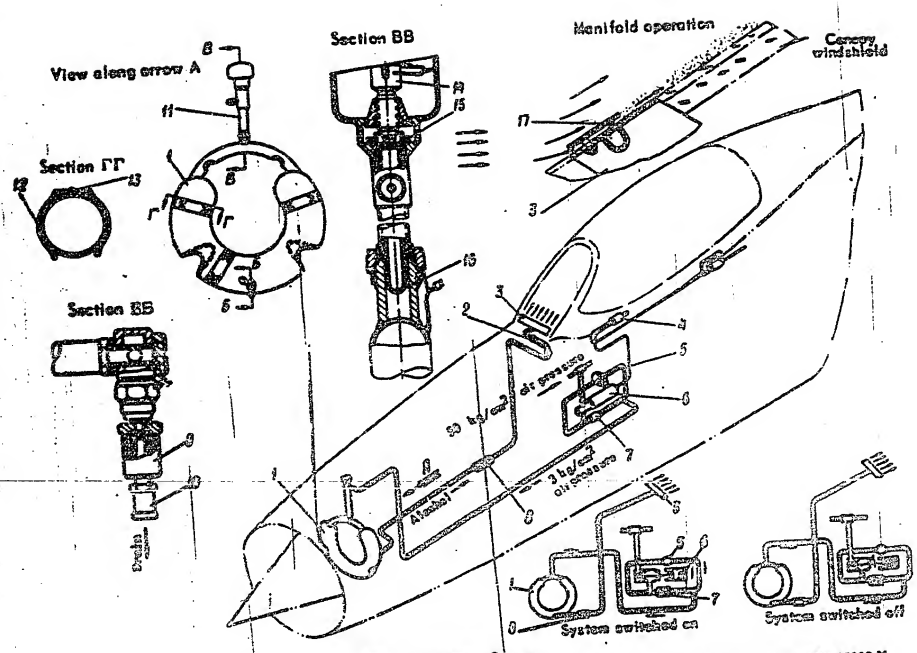

Fig.35. De-icing System

1 – alcohol tank; 2 – rubberized hose; 3 – manifold; 4 – control button; 5 – reducer РД-3; 6 – electric pneumatic valve ЕЭС000 М; 7,8 – non-return valves; 9 – drain connection; 10 – drain plug; 11 – filter; 12 – bracing head; 13 – clamp bolt; 14 – screw; 15 – cover; 16 – filter; 17 – plate.

SECRET
NO FOREIGN DISSEM

50X1-HUM

POOR ORIGINAL

Sanitized Copy Approved for Release 2011/02/18 : CIA-RDP82-00038R001700250001-7

Sanitized Copy Approved for Release 2011/02/18 : CIA-RDP82-00038R001700250001-7

50X1-HUM

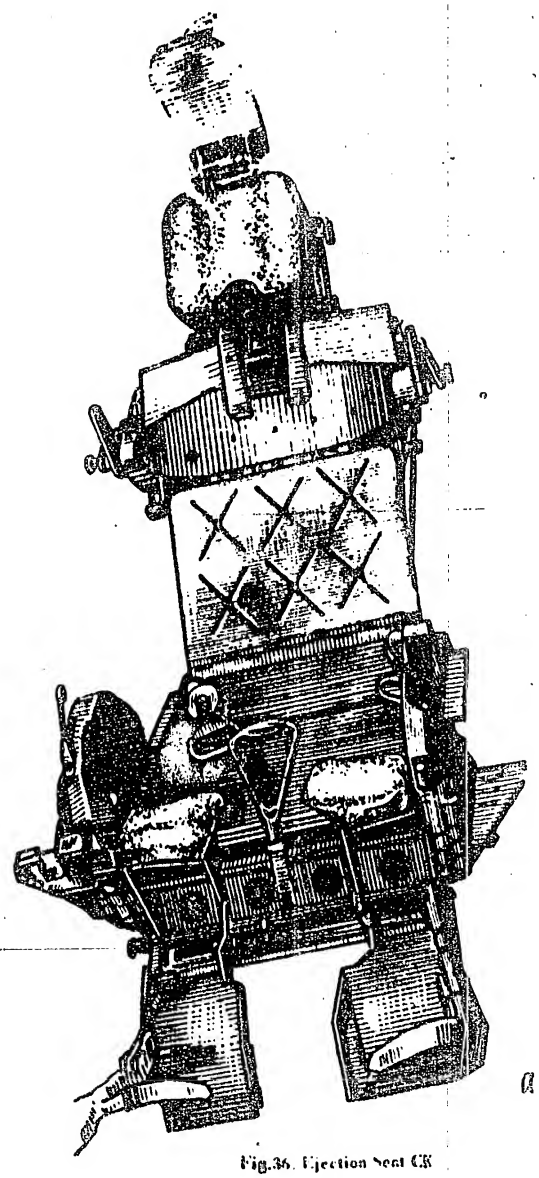

Fig.36. Ejection Seat CK

FOR OFFICIAL USE ONLY

Sanitized Copy Approved for Release 2011/02/18 : CIA-RDP82-00038R001700250001-7

Sanitized Copy Approved for Release 2011/02/18 : CIA-RDP82-00038R001700250001-7

50X1-HUM

POOR ORIGINAL

SECRET
NO FOREIGN DISSEM

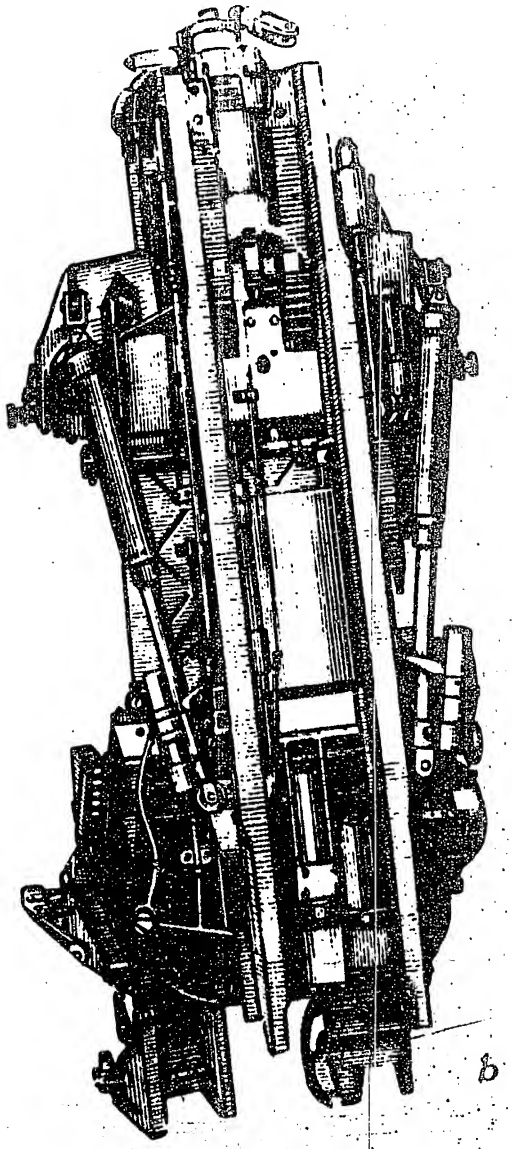

b

SECRET
NO FOREIGN DISSEM

Sanitized Copy Approved for Release 2011/02/18 : CIA-RDP82-00038R001700250001-7

Sanitized Copy Approved for Release 2011/02/18 : CIA-RDP82-00038R001700250001-7

SECRET
NO FOREIGN DISSEM

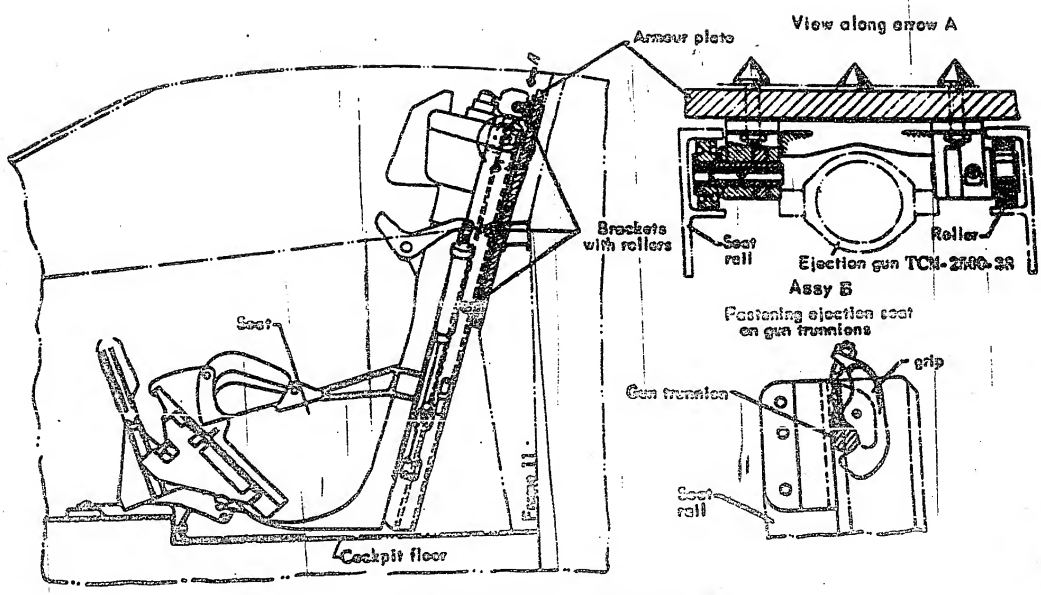

Fig.37. Installation of Ejection Seat in Cockpit

SECRET
NO FOREIGN DISSEM

50X1-HUM

POOR ORIGINAL

Sanitized Copy Approved for Release 2011/02/18 : CIA-RDP82-00038R001700250001-7

Sanitized Copy Approved for Release 2011/02/18 : CIA-RDP82-00038R001700250001-7

50X1-HUM

CONFIDENTIAL

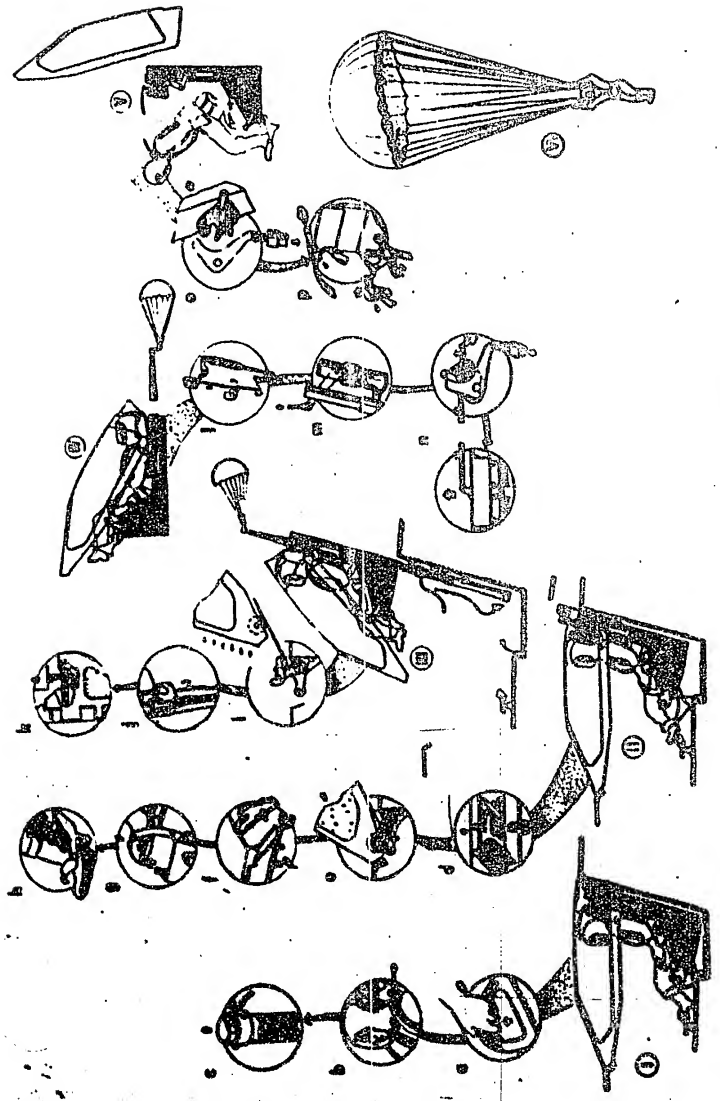

Fig. 20. Ejection with Canopy Used for Protection

Sanitized Copy Approved for Release 2011/02/18 : CIA-RDP82-00038R001700250001-7

Sanitized Copy Approved for Release 2011/02/18 : CIA-RDP82-00038R001700250001-7

50X1-HUM

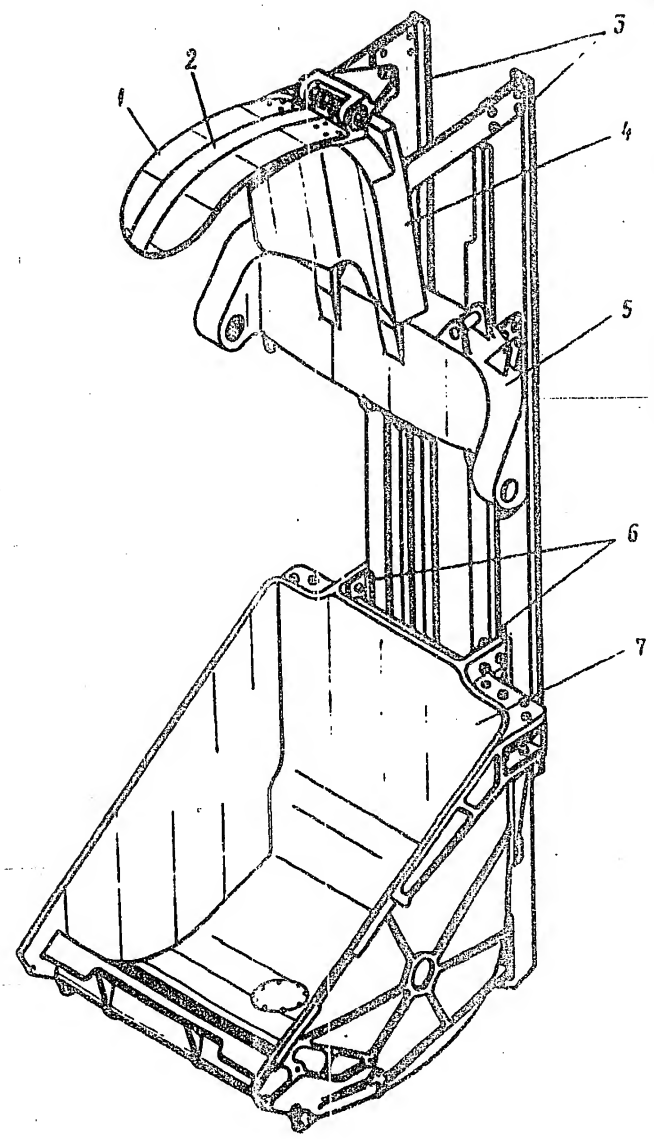

Fig.89. Ejection Seat Frame

1 – guard plate; 2 – covering of artificial chamois leather; 3 – vertical section; 4 – emergency headrest; 5 – upper beam; 6 – seat pan guides; 7 – seat pan.

POOR ORIGINAL

Sanitized Copy Approved for Release 2011/02/18 : CIA-RDP82-00038R001700250001-7

Sanitized Copy Approved for Release 2011/02/18 : CIA-RDP82-00038R001700250001-7

SECRET
NO FOREIGN DISSEM

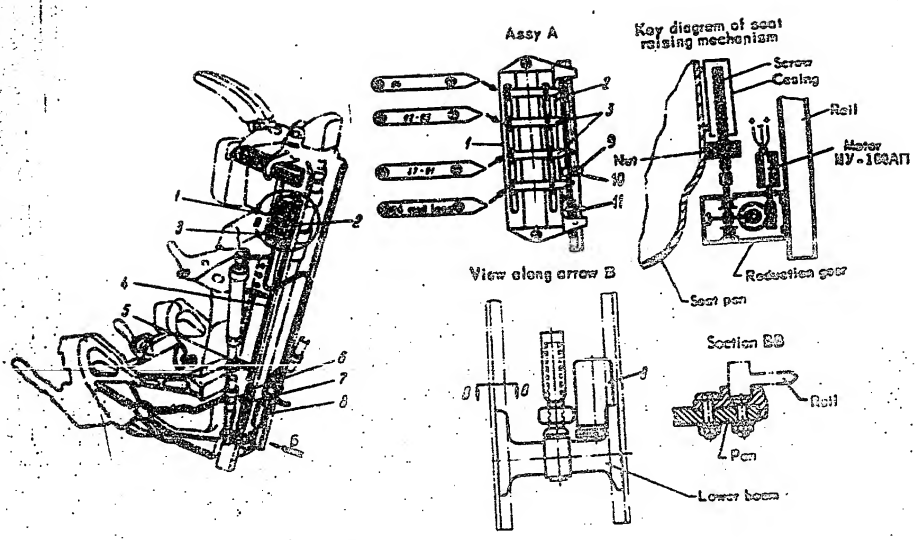

Fig.40. Ejection Seat Pen Control System

1 — seat pan adjusting mechanism; 2 — control rod; 3 — arrow-indicator; 4 — rod; 5 — bracket; 6 — screw; 7 — nut; 8 — electric motor; 9 — movable stop; 10 — locking screw; 11 — fixed stop.

SECRET
NO FOREIGN DISSEM

50X1-HUM

POOR ORIGINAL

Sanitized Copy Approved for Release 2011/02/18 : CIA-RDP82-00038R001700250001-7

Sanitized Copy Approved for Release 2011/02/18 : CIA-RDP82-00038R001700250001-7

50X1-HUM

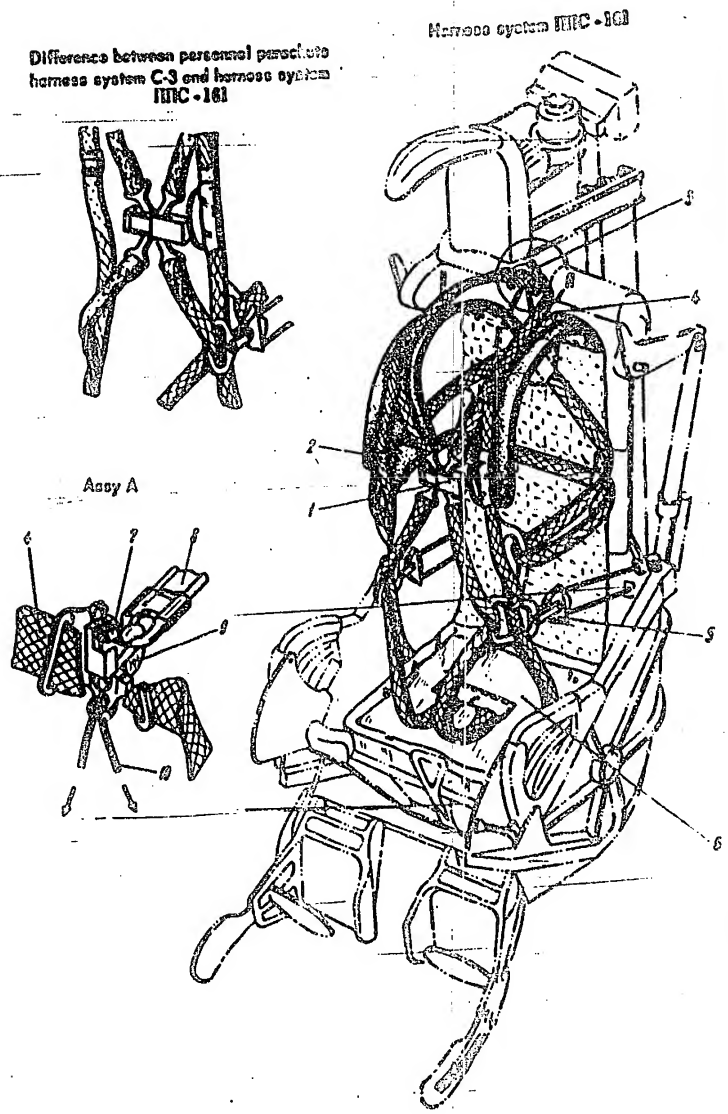

Fig.41. Harness Assembly

1 – central lock; 2 – shoulder lock; 3 – back lock; 4 – chest for belt; 5 – pulley; 6 – personnel parachute; 7 – latch; 8 – strap; 9 – hook with buckle; 10 – check-shooting cord.

FOR OFFICIAL USE ONLY

Sanitized Copy Approved for Release 2011/02/18 : CIA-RDP82-00038R001700250001-7

Sanitized Copy Approved for Release 2011/02/18 : CIA-RDP82-00038R001700250001-7

50X1-HUM

FOR OFFICIAL USE ONLY

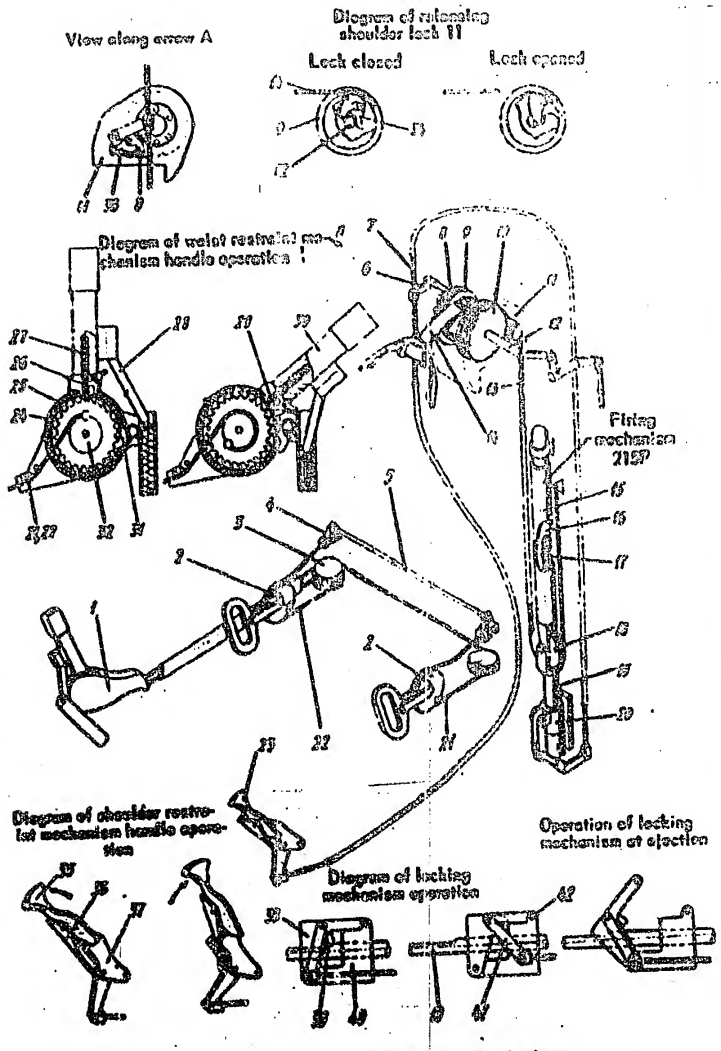

Fig. 42. Harness System Restraint Mechanism

1 – waist belt restraint mechanism handle; 2 – pulley with buckle; 3 – guide roller; 4 – waist belt restraint mechanism lock; 5 – rod; 6 – bell-crank; 7 – cable; 8 – ratchet; 9 – rod; 10 – roller; 11 – shoulder belt restraint mechanism lock; 12 – locking rod; 13 – restraint mechanism cables; 14 – stops; 15 – outer tube of firing mechanism 21SP; 16 – inner tube of firing mechanism 21SP; 17 – springs; 18 – roller; 19 – rod; 20 – pilot's initial position locking mechanism; 21,22 – waist belt restraint mechanism cables; 23 – shoulder belt restraint mechanism handle; 24 – handle stop; 25 – body stop; 26,27,28 – pawls; 27 – spring; 28 – pusher; 29 – stop; 30 – handle; 31 – roller; 34 – hinge support; 36 – stop lever; 38 – bell-crank; 39 – bracket; 40 – hinge piece; 39 – stop; 40 – bracket; 41 – bell-crank; 42 – shear screw.

Sanitized Copy Approved for Release 2011/02/18 : CIA-RDP82-00038R001700250001-7

Sanitized Copy Approved for Release 2011/02/18 : CIA-RDP82-00038R001700250001-7

50X1-HUM

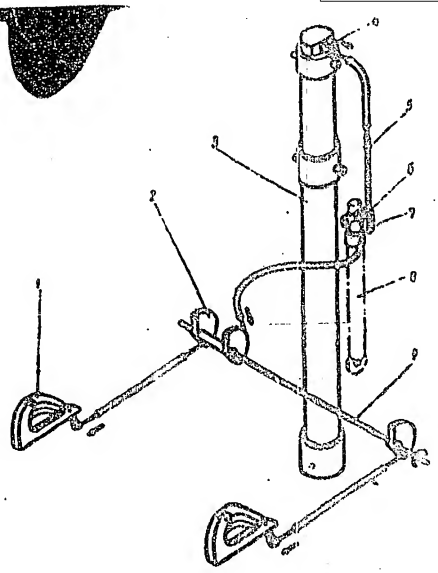

Fig.43. Control System of Ejection Gun TCH-2000-23
1 – hand-grip; 2 – sector; 3 – ejection gun TCH-2000-23;
4 – pin; 5 – rod; 6 – firing mechanism release lever
7 – shackle; 8 – firing mechanism SPN; 9 – shaft.

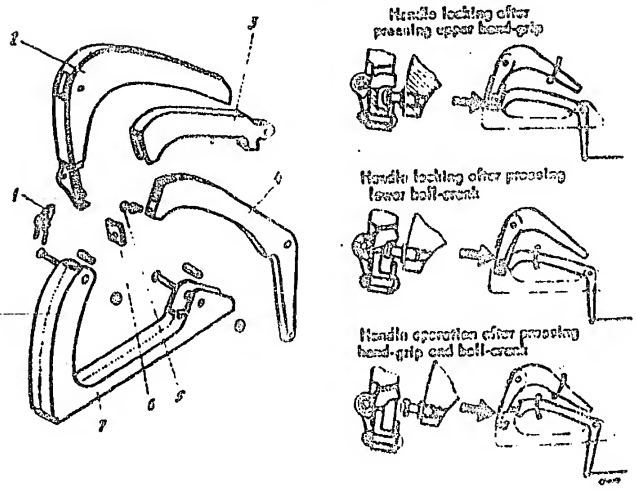

Fig.44. Hand-Grip Construction and Operation
1 – pawl; 2 – safety lever; 3 – protecting yoke; 4 – release lever; 5 – bolt; 6 – plate; 7 – body.

POOR ORIGINAL

Sanitized Copy Approved for Release 2011/02/18 : CIA-RDP82-00038R001700250001-7

Sanitized Copy Approved for Release 2011/02/18 : CIA-RDP82-00038R001700250001-7

50X1-HUM

POOR QUALITY

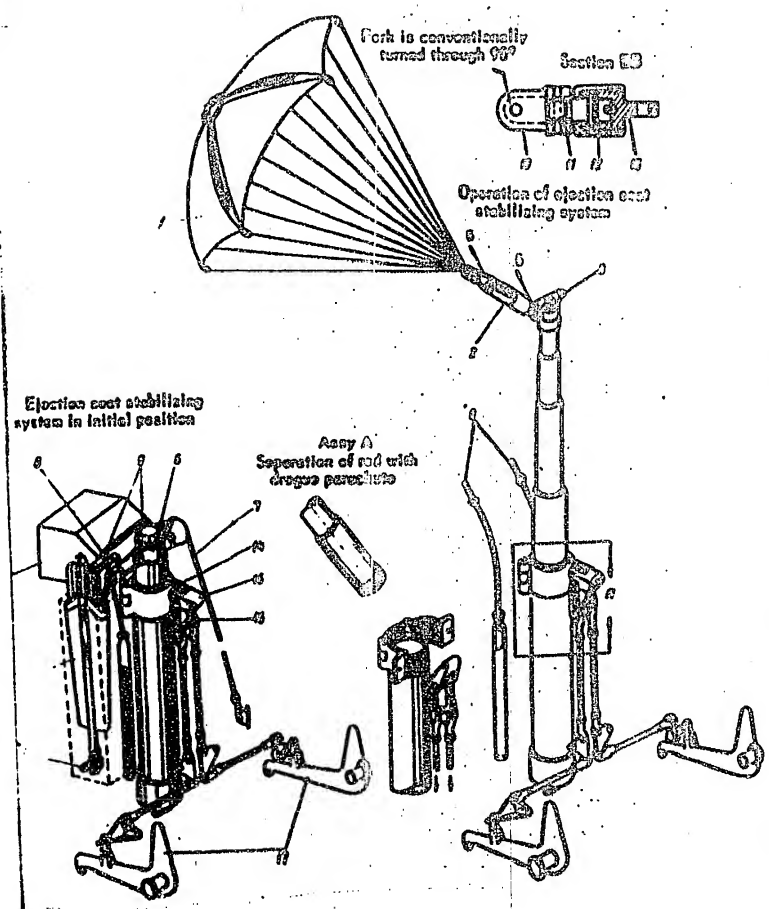

Fig.45. Ejection Seat Stabilizing System

– drogue parachute; 2 – adapter; 3 – parachute container; 4 – cone for closed lines; 5 – yoke; 6 – pin of
ring mechanism 215Ii; 7 – cable; 8 – yoke; 9 – rod; 10 – link; 11 – chain; 12 – holder; 13 – lever; 14 – collar
15 – yoke; 16 – link; 17 – levers for canopy separation.

Sanitized Copy Approved for Release 2011/02/18 : CIA-RDP82-00038R001700250001-7

Sanitized Copy Approved for Release 2011/02/18 : CIA-RDP82-00038R001700250001-7

SECRET
NO FOREIGN DISSEM

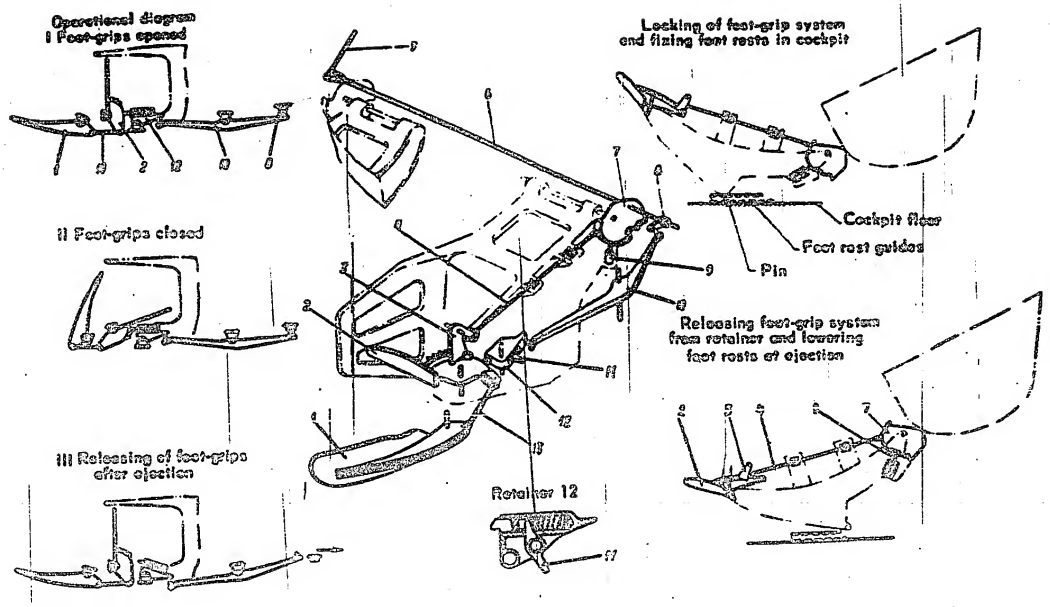

Fig.46. Foot-Grip System

1 – foot-grip; 2 – lever; 3 – retainer; 4 – pusher; 5 – rod; 6 – shaft; 7 – shaped sector; 8 – bell-crank; 9 – retainer; 10 – lever; 11 – pawl; 12 – retainer; 13 – rod.

50X1-HUM

POOR ORIGINAL

Sanitized Copy Approved for Release 2011/02/18 : CIA-RDP82-00038R001700250001-7

Sanitized Copy Approved for Release 2011/02/18 : CIA-RDP82-00038R001700250001-7

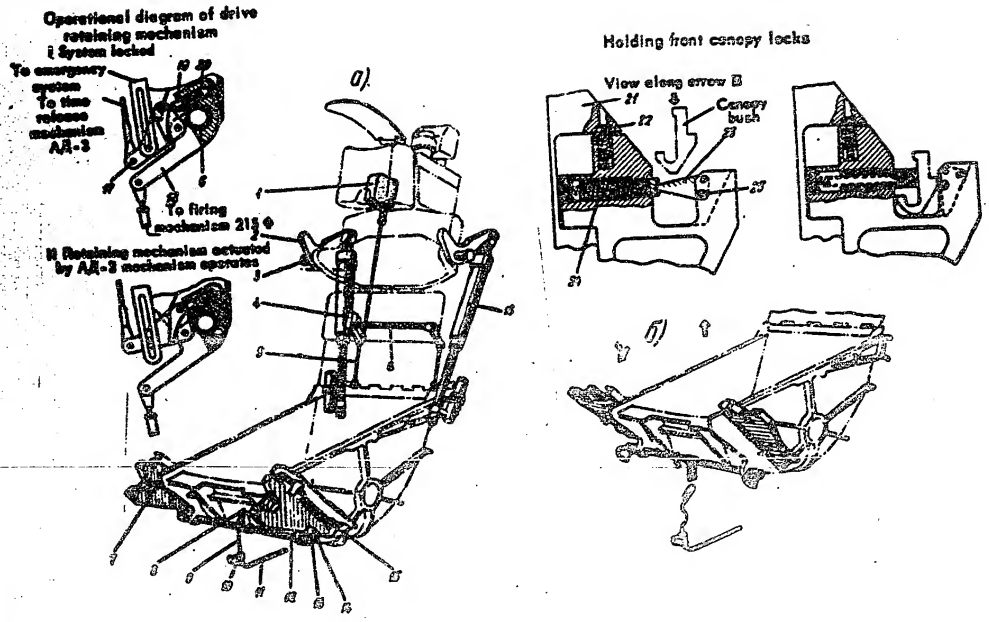

Fig.47. Canopy Holding and Separation System

1 – АД-3 time release mechanism; 2 – canopy separation levers; 3 – trunnions; 4 – drive retaining mechanism; 5 – rod; 6 – shaft; 7 – hinge; 8 – bell-crank; 9 – cable; 10 – bracket; 11 – tube; 12 – shaft; 13 – stops; 14 – shear screw; 15 – spring; 16 – firing mechanism 21Ф; 17 – lever; 18 – bell-crank; 19 – pushes; 20 – spring; 21 – bracket; 22 – stop pin; 23 – stops; 24 – pins; 25 – shear screw.

SECRET
NO FOREIGN DISSEM

SECRET
NO FOREIGN DISSEM

50X1-HUM

POOR ORIGINAL

Sanitized Copy Approved for Release 2011/02/18 : CIA-RDP82-00038R001700250001-7

Sanitized Copy Approved for Release 2011/02/18 : CIA-RDP82-00038R001700250001-7

50X1-HUM

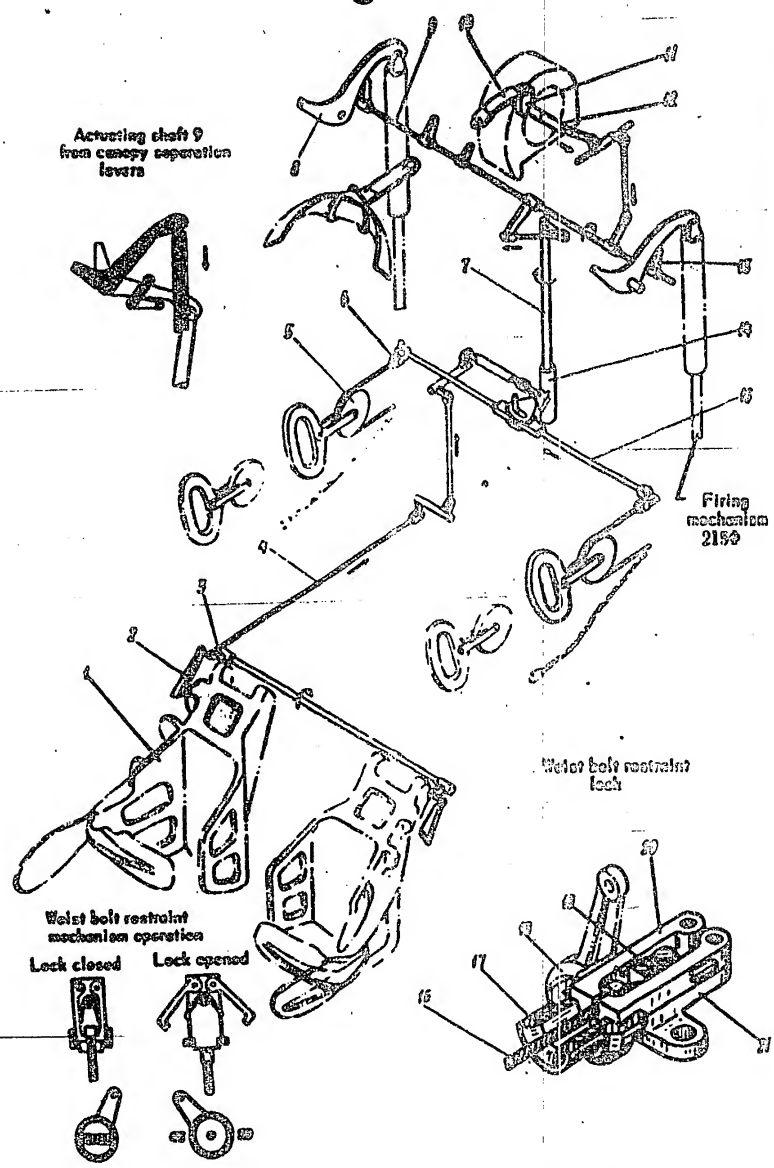

Fig. 63. Release System for Restraint Locks and Foot-Grips

1 – foot-rest; 2 – lever for opening foot-grips; 3 – bell-crank; 4 – rod; 5 – pulley with buckle; 6 – waist belt restraint lock; 7 – vertical shaft; 8 – levers for canopy separation; 9 – driving shaft; 10 – shoulder belt restraint mechanism strap; 11 – hinge support; 12 – locking rod; 13 – release system drive bell-crank; 14 – sliding bell-crank; 15 – release rod for waist belt restraint lock; 16 – waist belt restraint mechanism cable; 17 – nut; 18 – bell-crank; 19 – spring; 20 – grip; 21 – body.

Sanitized Copy Approved for Release 2011/02/18 : CIA-RDP82-00038R001700250001-7

Sanitized Copy Approved for Release 2011/02/18 : CIA-RDP82-00038R001700250001-7

50X1-HUM

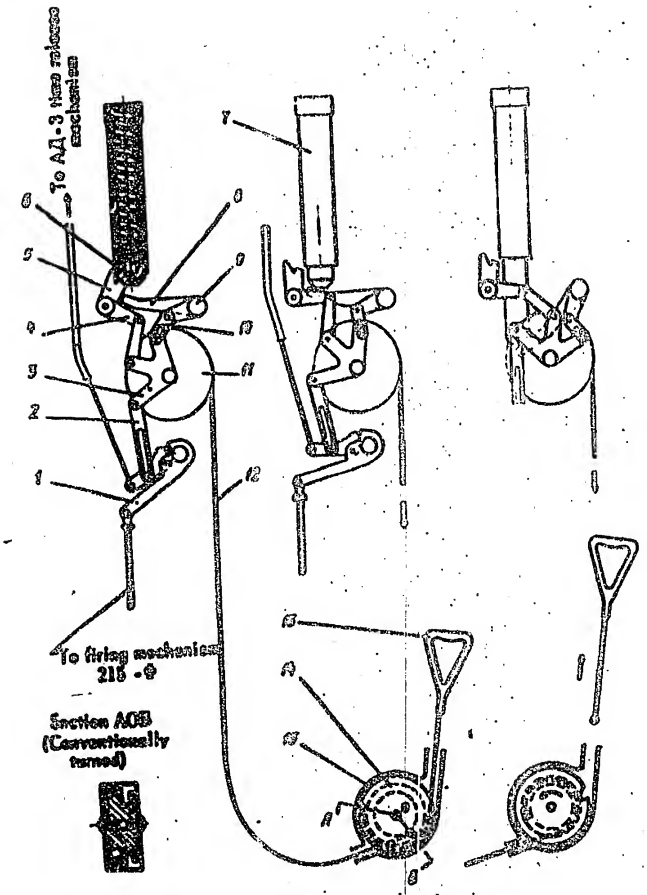

Fig.49. Emergency System for Actuating Firing Mechanisms 215Ф and Releasing Restraint Locks

1 – mechanism for drive locking; 2 – shackle; 3 – three-arm lever; 4 – bell-crank; 5 – stop; 6 – rod; 7 – spring intensifier; 8 – lever; 9 – driving shaft of restraint lock release system; 10 – shackle; 11 – roller; 12 – cable; 13 – emergency landing; 14 – roller; 15 – body.

Sanitized Copy Approved for Release 2011/02/18 : CIA-RDP82-00038R001700250001-7

Sanitized Copy Approved for Release 2011/02/18 : CIA-RDP82-00038R001700250001-7

50X1-HUM

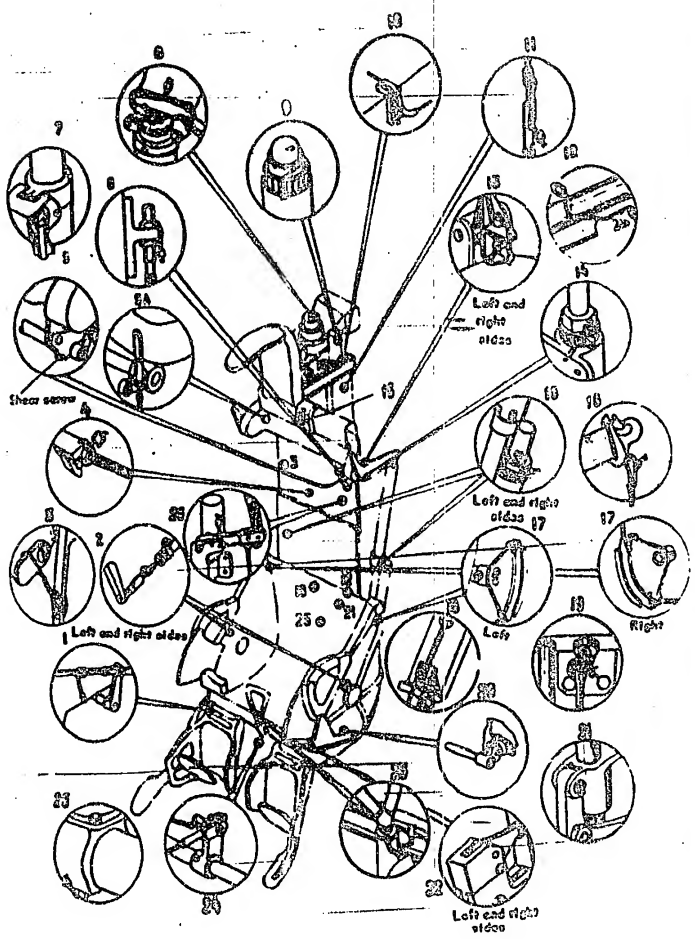

Fig.50. Seat Locking Diagram
(See Table 1)

Sanitized Copy Approved for Release 2011/02/18 : CIA-RDP82-00038R001700250001-7

Sanitized Copy Approved for Release 2011/02/18 : CIA-RDP82-00038R001700250001-7

50X1-HUM

FILE COPY

Table I

Seat Locking System
(Fig. 50)

Reference line in Fig. 50	Place of locking	Locking device
1	2	3
1	Foot-grip release rod	HI-KO.8 without seal
2	Tip of control cable of seat ejection gun TCH-2500-60	KO-KO.8 without seal
3	Lock holding roller from turning when operated by AH-2V mechanism	HI-KO.8 Seal 1038A63
4	Bowden cable of restraint lock emergency release system	KO-KO.8 Seal 1038A-63
5	Transverse shaft with bracket	Shear bolt AHTATO-2 Same Stand. TOCT 6703-49
5A	Actuating rod of restraint lock release system	KO-KO.8 Seal 1038A-63
6	Locking device of 21SH firing mechanism cable	KO-KO.8 Seal 1038A-63
7	Fastening lock of 21SH firing mechanism collar shoulders	Shear screw, 2 pcs. Steel 10, annealed, MHTV 2333-49
8	External sleeve with backlap of firing mechanism 21SH head	Locking screw, Steel 25HHTV 2333-49 (attached to part 21SH) KO-KO.8. Seal 1038A-63
9	Locking plunger axis of ejection gun TCH-2500-60	KO-KO.8 Seal 1038A-63
10	Channel for cable of firing mechanism 21SH	KO-KO.8 without seal
11	Control rod of ejection gun TCH-2500-60	KO-KO.8 Seal 1038A-63
12	Waist belt restraint lock release rod	KO-KO.8 Sp.Sp. TOCT 703-41 Seal 1038A-63 Special steel AHSI-12
13	Lock release shackle of firing mechanism 21SH	KO-KO.8. Seal 1038A-63
14	Firing mechanism 21SP locking plunger axis	KO-KO.8. Seal 1038A-63
15	External cylinder with rod	Locking screw, Steel 25 MHTV 2333-49 (attached to part 21SH) KO-KO.8. Seal 1038A-63
16	Shoulder belt restraint mechanism fastening unit	KO-KO.8 without seal
17	Shaft center of TCH-2500-60 ejection gun control	KO-KO.8 without seal
18	Pin of TCH-2500-60 ejection gun release valve	HI-KO.8 Seal 1038A-63
19	Flexible pin of AH-2V mechanism cocked position	One cotter thread
20	Hinge support strap	Shear screw AHSI-12
21	K	
21	Locking mechanism of shoulder belt restraint system	Shear screw AH-T dia. 8.5 Shear screw AHSI-12
22	Canopy holding hinge supports	KO-KO.8 Seal 1038A-63
23	Emergency handle	Shear wire AHSI-12
24	Shaft bolt-nuts for fixing hinge supports	KO-KO.8
25	Regulator plug of seat raising mechanism	KO-KO.8. Seal 1038A-63
26	21SP firing mechanism lever	

Sanitized Copy Approved for Release 2011/02/18 : CIA-RDP82-00038R001700250001-7

Sanitized Copy Approved for Release 2011/02/18 : CIA-RDP82-00038R001700250001-7

SECRET
NO FOREIGN DISSEM

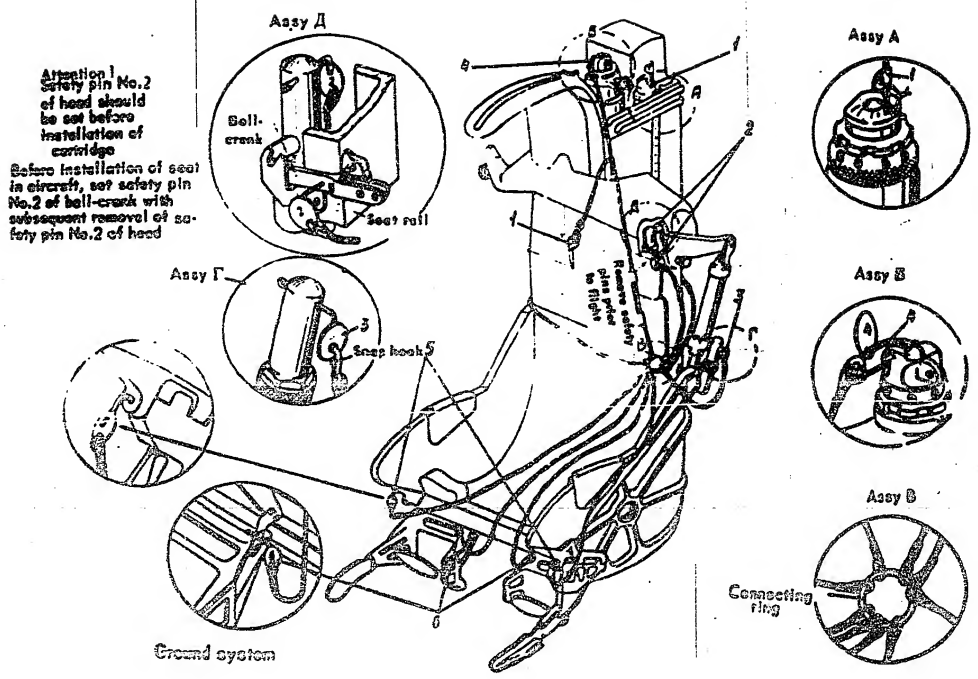

Fig.51. Locking Systems

SECRET
NO FOREIGN DISSEM

50X1-HUM

Sanitized Copy Approved for Release 2011/02/18 : CIA-RDP82-00038R001700250001-7

Sanitized Copy Approved for Release 2011/02/18 : CIA-RDP82-00038R001700250001-7

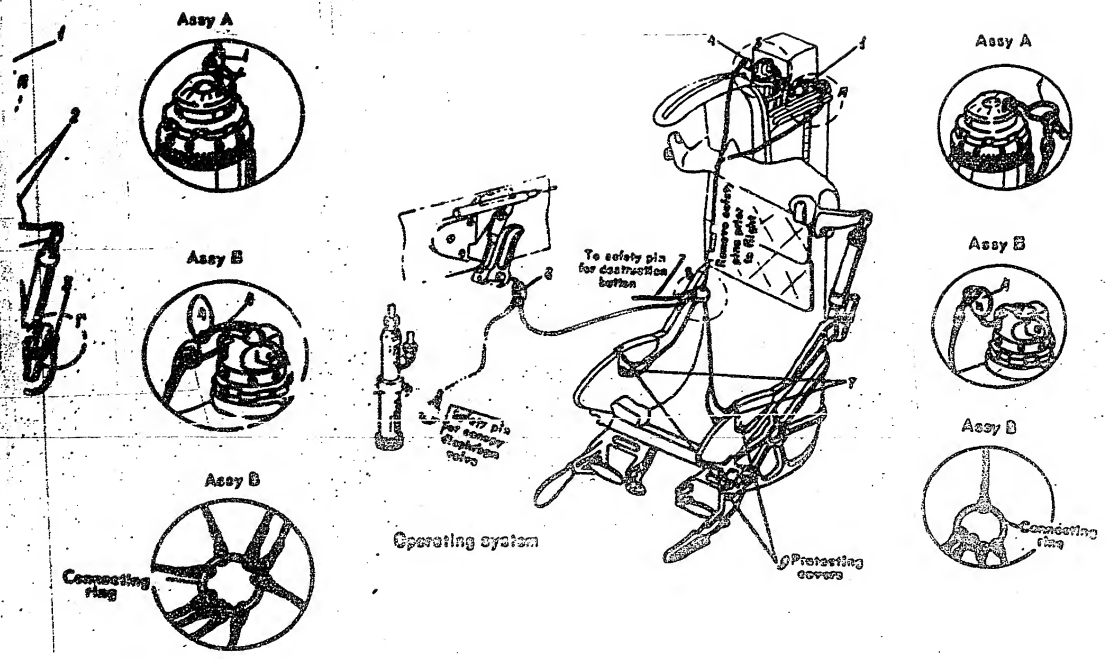

Fig.51. Locking Systems

SECRET
NO FOREIGN DISSEM

50X1-HUM

SECRET
NO FOREIGN DISSEM

TVA-2000 BOOK ONE

Sanitized Copy Approved for Release 2011/02/18 : CIA-RDP82-00038R001700250001-7

Sanitized Copy Approved for Release 2011/02/18 : CIA-RDP82-00038R001700250001-7

SECRET
NO FOREIGN DISSEM

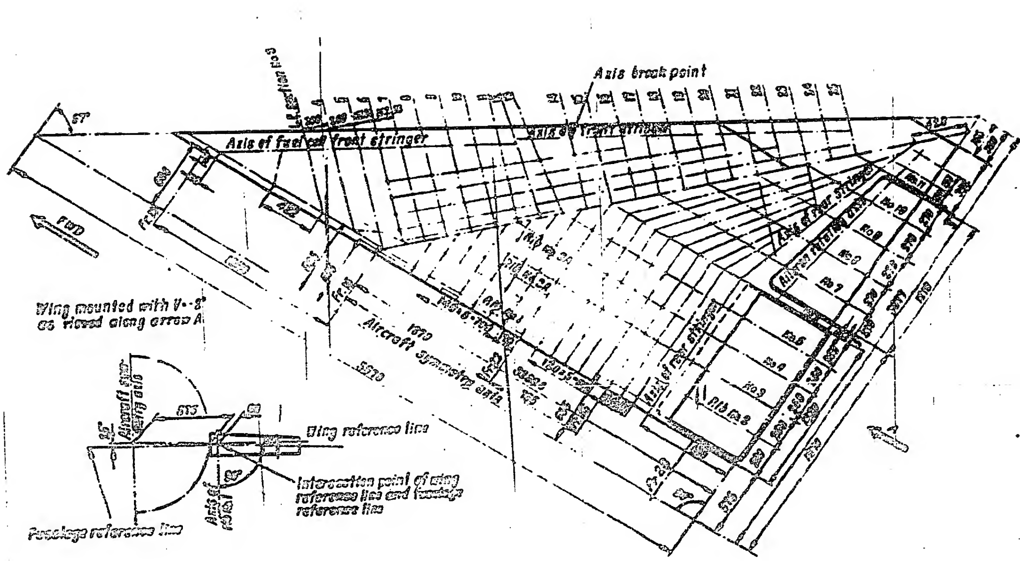

Fig.58. Geometrical Diagram of the Wing

SECRET
NO FOREIGN DISSEM

50X1-HUM

Sanitized Copy Approved for Release 2011/02/18 : CIA-RDP82-00038R001700250001-7

Sanitized Copy Approved for Release 2011/02/18 : CIA-RDP82-00038R001700250001-7

SECRET
NO FOREIGN DISSEM

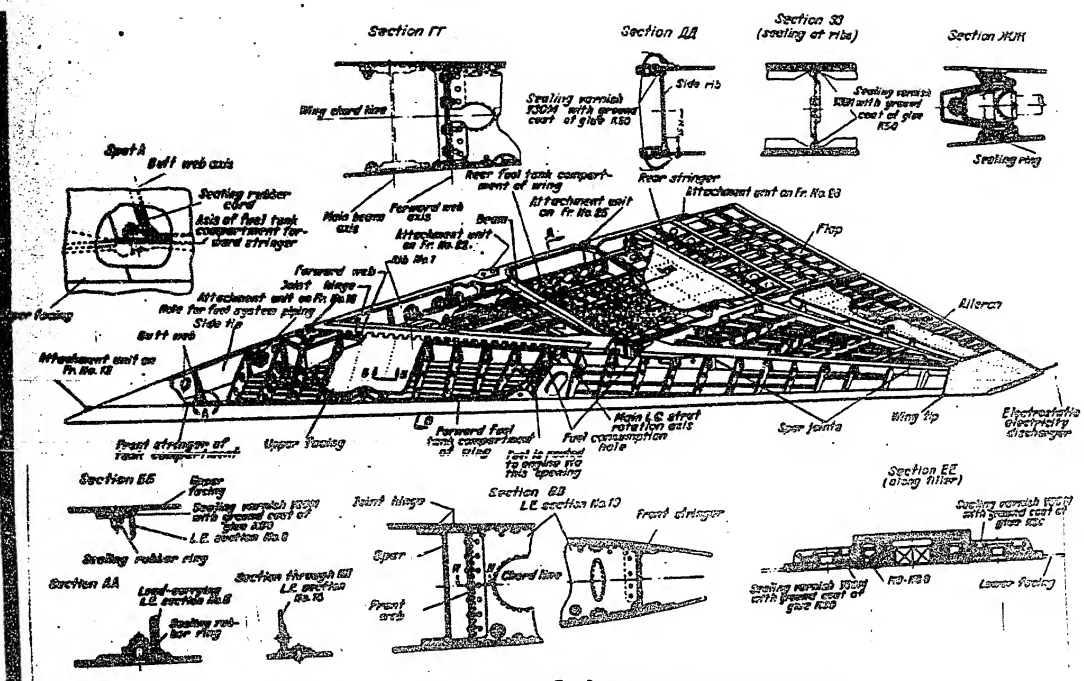

Fig.33. Wing Structure

50X1-HUM

SECRET
NO FOREIGN DISSEM

POOR ORIGINAL

Sanitized Copy Approved for Release 2011/02/18 : CIA-RDP82-00038R001700250001-7

Sanitized Copy Approved for Release 2011/02/18 : CIA-RDP82-00038R001700250001-7

SECRET
NO FOREIGN DISSEM

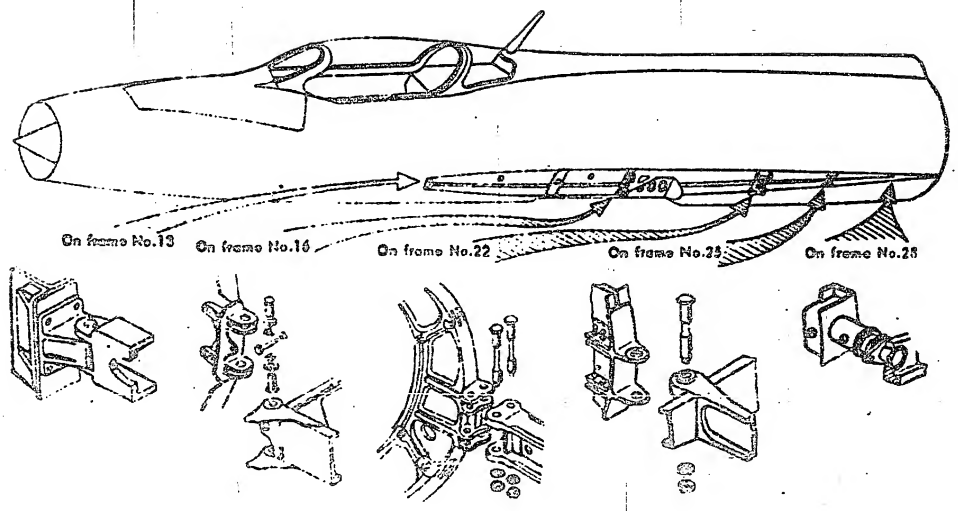

Fig.54. Wing Attachment Units

50X1-HUM

SECRET
NO FOREIGN DISSEM

POOR ORIGINAL

Sanitized Copy Approved for Release 2011/02/18 : CIA-RDP82-00038R001700250001-7

Sanitized Copy Approved for Release 2011/02/18 : CIA-RDP82-00038R001700250001-7

50X1-HUM

CONFIDENTIAL

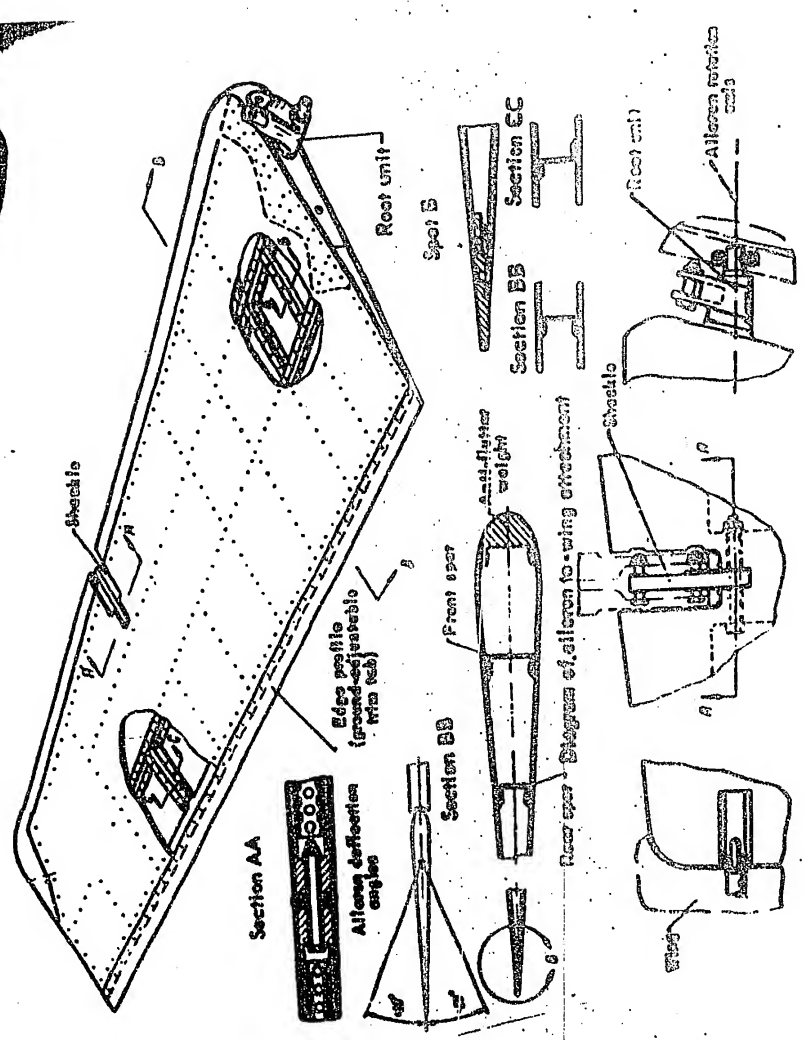

Fig.85. Aileron

Sanitized Copy Approved for Release 2011/02/18 : CIA-RDP82-00038R001700250001-7

Sanitized Copy Approved for Release 2011/02/18 : CIA-RDP82-00038R001700250001-7

50X1-HUM

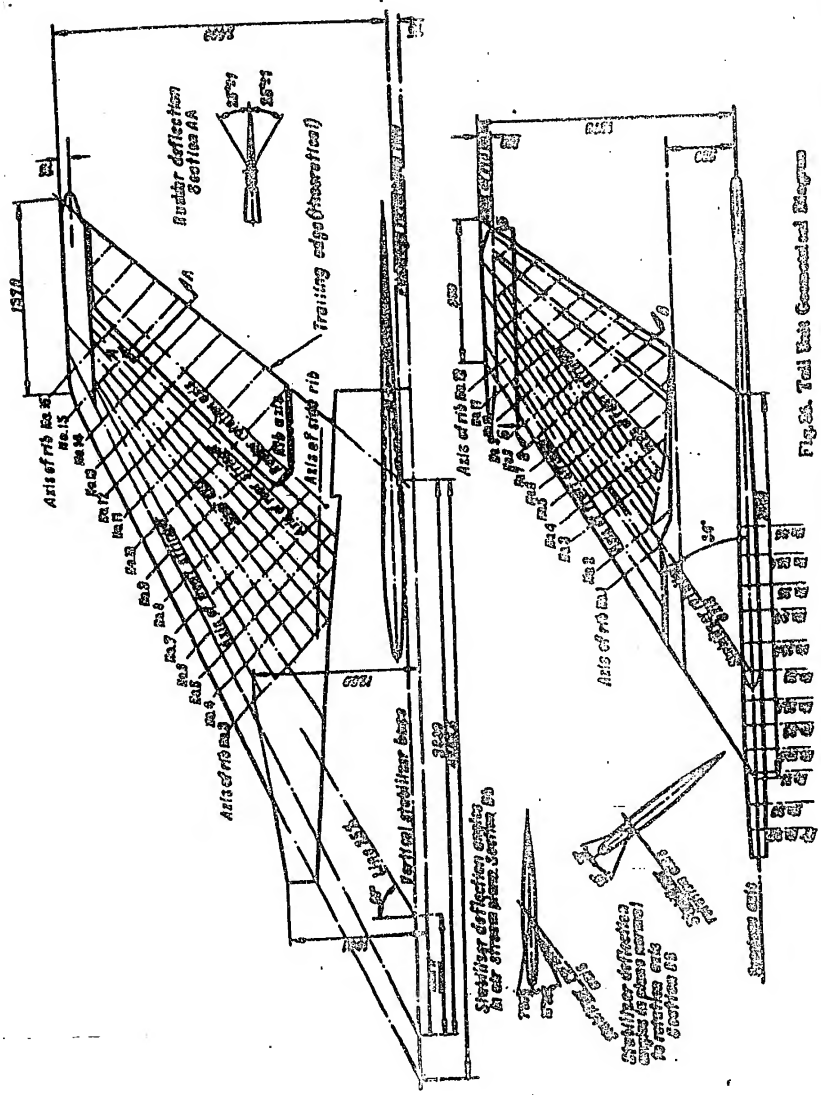

Fig. 34. Tail Unit Generated Diagram

FOR OFFICIAL USE ONLY

Sanitized Copy Approved for Release 2011/02/18 : CIA-RDP82-00038R001700250001-7

Sanitized Copy Approved for Release 2011/02/18 : CIA-RDP82-00038R001700250001-7

50X1-HUM

POOR ORIGINAL

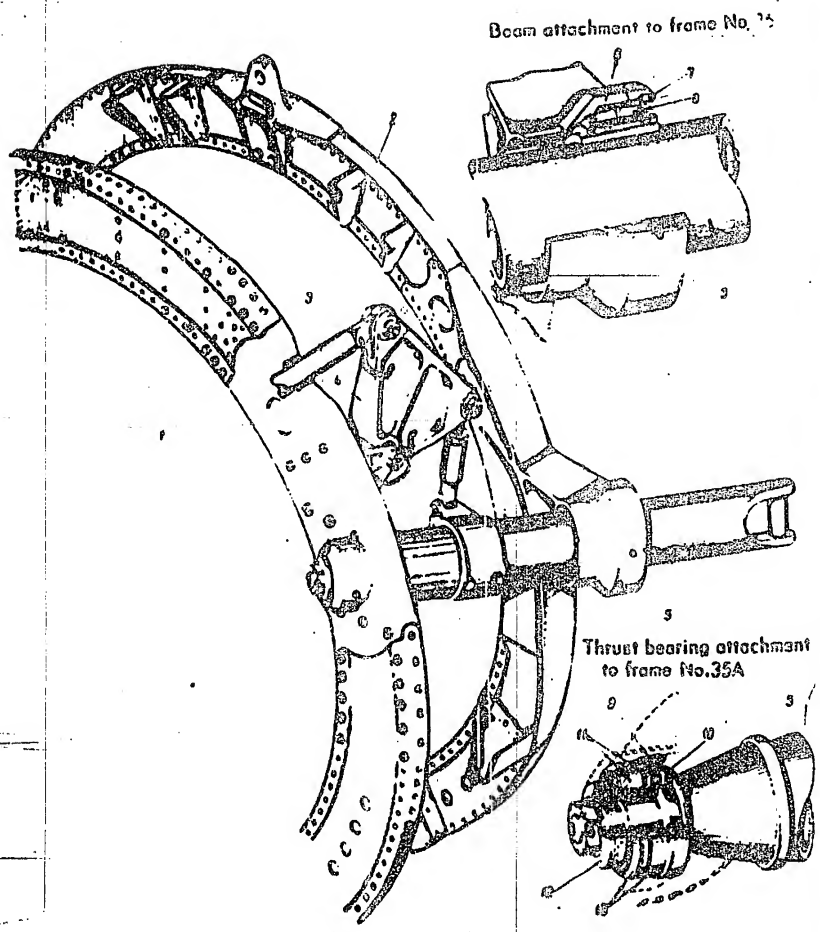

Fig.57. Stabilizer Attachment Beam

1 – frame No.35A; 2 – frame No.35; 3 – control rod; 4 – bell-crank; 5 – attachment beam; 6 – ring; 7 – nut; 8 – ball bearing; 9 – nut; 10 – cover; 11 – ball bearing; 12 – bushing; 13 – ring

Sanitized Copy Approved for Release 2011/02/18 : CIA-RDP82-00038R001700250001-7

Sanitized Copy Approved for Release 2011/02/18 : CIA-RDP82-00038R001700250001-7

SECRET
NO FOREIGN DISSEM

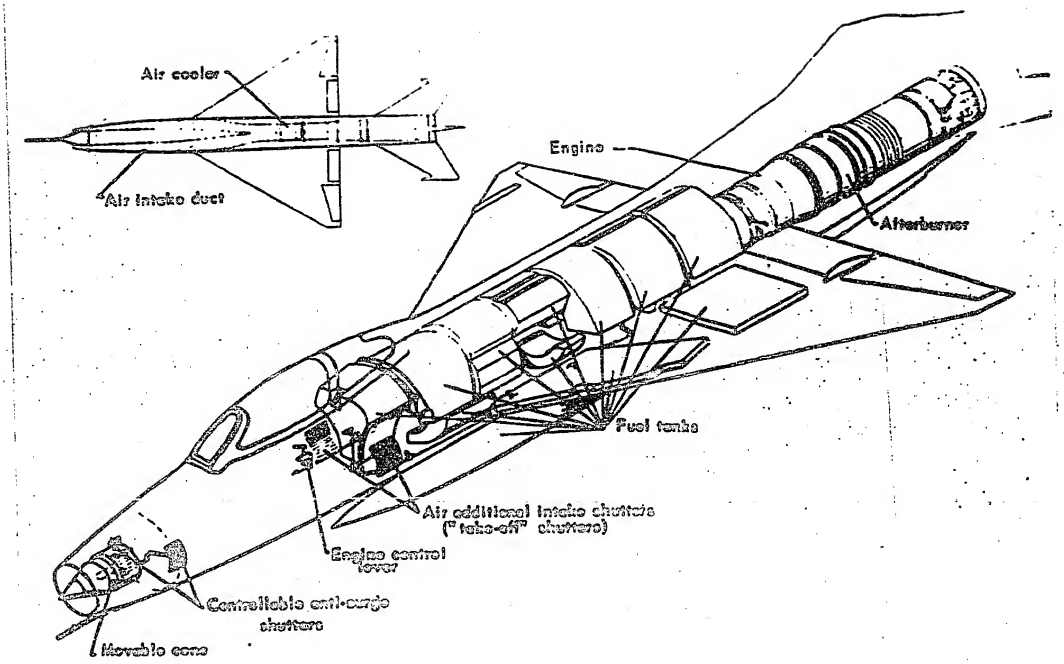

Fig.58. Power Plant (General View)

SECRET
NO FOREIGN DISSEM

50X1-HUM

POOR ORIGINAL

Sanitized Copy Approved for Release 2011/02/18 : CIA-RDP82-00038R001700250001-7

Sanitized Copy Approved for Release 2011/02/18 : CIA-RDP82-00038R001700250001-7

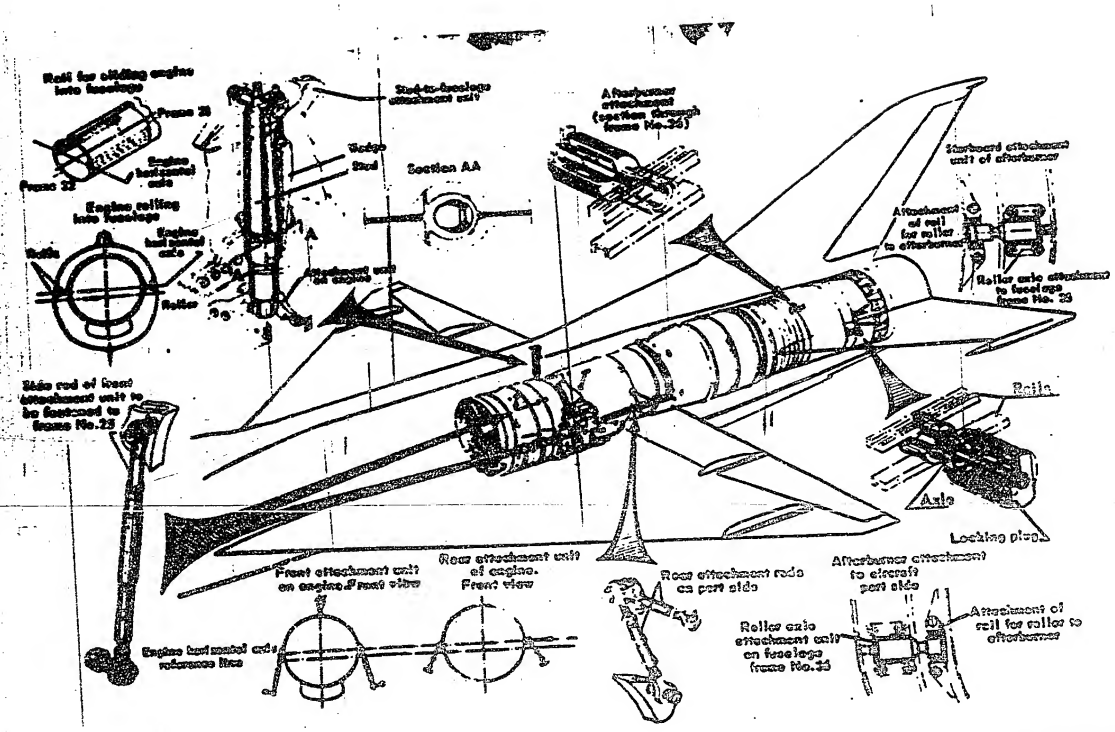

Fig.59. Engine and afterburner attachment units

SECRET
NO FOREIGN DISSEM

50X1-HUM

POOR ORIGINAL

Sanitized Copy Approved for Release 2011/02/18 : CIA-RDP82-00038R001700250001-7

Sanitized Copy Approved for Release 2011/02/18 : CIA-RDP82-00038R001700250001-7

SECRET
NO FOREIGN DISSEM

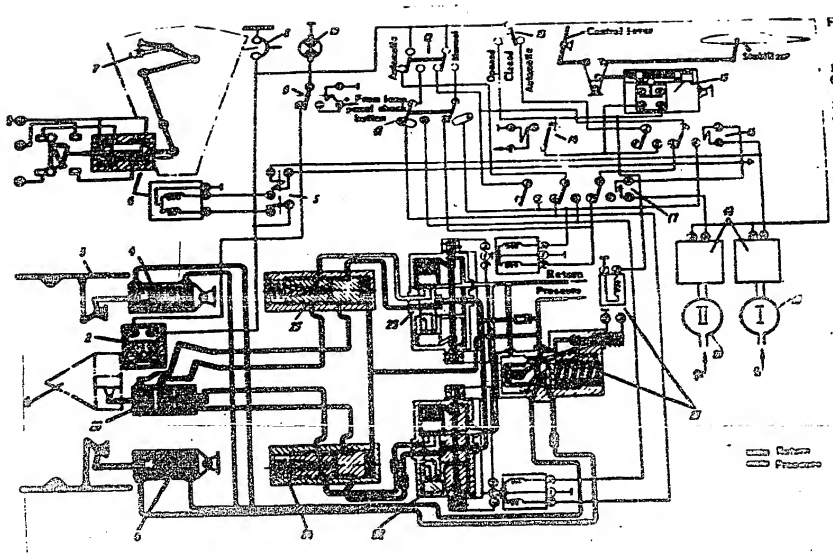

Fig.60. Diagram of Movable Cone and Anti-Surge Shutters Control

1 – movable cone; 2 – microswitch КВ-9А (reference 1034) in the circuit of the cone extended position indication system; 3 – anti-surge shutters; 4 – hydraulic cylinder; 5 – engine control lever blocking system cut-in relay ТКЕ-521ЦД; 6 – electromagnet ТЭО-2/2 (reference 733) of engine control lever blocking system; 7 – M number stop on engine control lever; 8 – cone-engine control lever blocking system circuit breaker АЗС-10 (reference 338); 9 – relay for checking panel lamps and hydraulic system warning lamps, ТКЕ-561Д (reference 869); 10 – cone extended position warning lamp (reference 1040); 11 – cone manual control selector switch (reference 878); 12 – cone selector 2ПП-45 (reference 584); 13 – anti-surge shutter control selector 1ШП-45 (reference 1238); 14 – relay ТКЕ-211Д (reference 1418) for blocking anti-surge shutters at supersonic; 15 – microswitch КВ-9А (reference 1142) in anti-surge shutter control circuit; 16 – cone control relay ТКЕ-531Д (reference 1268); 17 – cone control relay ТКЕ-531Д (reference 1278); 18 – filters МР-1.5 (reference 588) and МР-1.0 (reference 1228) in M number transducer circuit; 19 – M number transducer МР-1.5 (reference 649); 20 – M number transducer МР-1.0 (reference 1240); 21 – anti-surge shutter control valve ГА-15А (reference 1218); 22 – electro-hydraulic valve ГА-185 (controlling cone extension to second position) (reference 1228); 23 – electro-hydraulic valve ГА-185 (controlling cone extension to first position (reference 728); 24 – hydraulic lock; 25 – hydraulic lock; 26 – cone control three-position cylinder.

SECRET
NO FOREIGN DISSEM

50X1-HUM

POOR ORIGINAL

Sanitized Copy Approved for Release 2011/02/18 : CIA-RDP82-00038R001700250001-7

Sanitized Copy Approved for Release 2011/02/18 : CIA-RDP82-00038R001700250001-7

SECRET
NO FOREIGN DISSEM

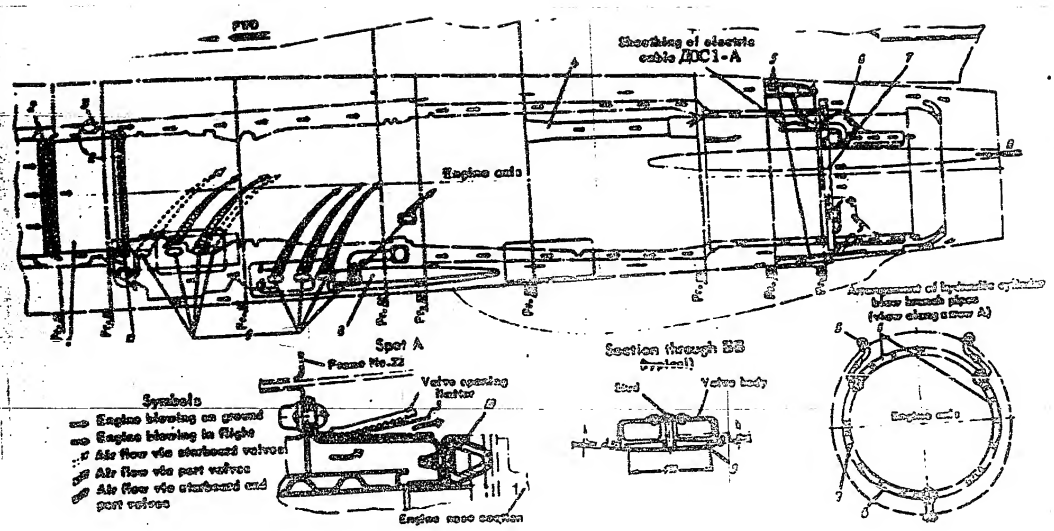

Fig.61. Diagram of Engine Compartment Blowing

1 – air nozzle; 2 – gauze-protected parts; 3 – plate valve; 4 – branch pipe; 5 – branch pipes; 6 – shroud; 7 – jet nozzle flap control rings; 8 – branch pipes; 9 – disc valves; 10 – profile.

SECRET
NO FOREIGN DISSEM

50X1-HUM

POOR ORIGINAL

Sanitized Copy Approved for Release 2011/02/18 : CIA-RDP82-00038R001700250001-7

Sanitized Copy Approved for Release 2011/02/18 : CIA-RDP82-00038R001700250001-7

SECRET
NO FOREIGN DISSEM

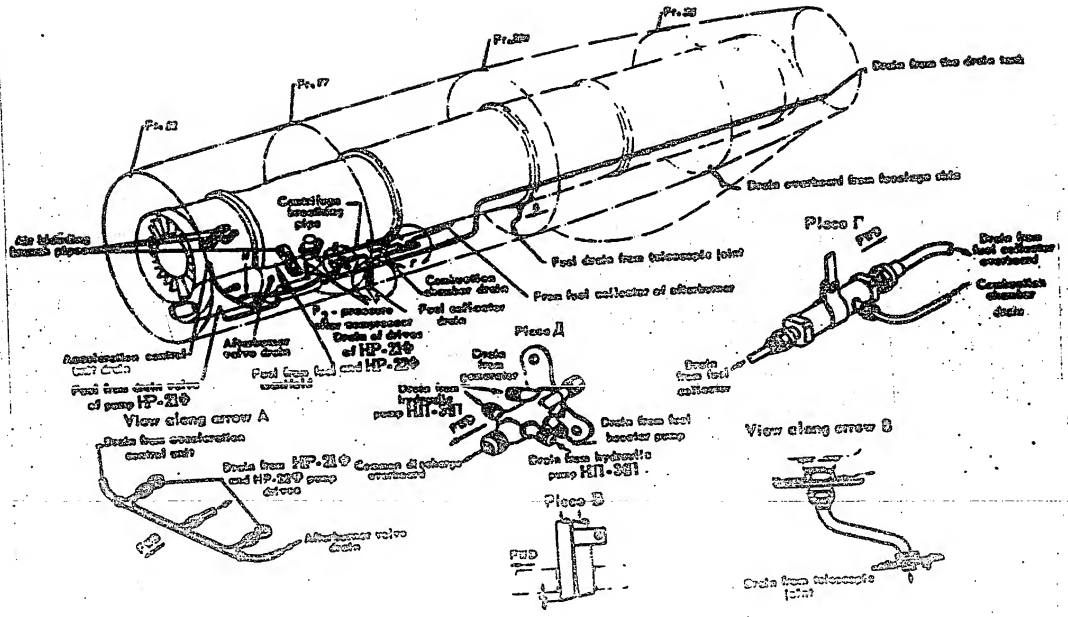

Fig.62. Power Plant Breathing and Drain Systems

SECRET
NO FOREIGN DISSEM

50X1-HUM

POOR ORIGINAL

Sanitized Copy Approved for Release 2011/02/18 : CIA-RDP82-00038R001700250001-7

Sanitized Copy Approved for Release 2011/02/18 : CIA-RDP82-00038R001700250001-7

SECRET
NO FOREIGN DISSEM

50X1-HUM

SECRET
NO FOREIGN DISSEM

POOR ORIGINAL

Sanitized Copy Approved for Release 2011/02/18 : CIA-RDP82-00038R001700250001-7

Sanitized Copy Approved for Release 2011/02/18 : CIA-RDP82-00038R001700250001-7

SECRET
NO FOREIGN DISSEM

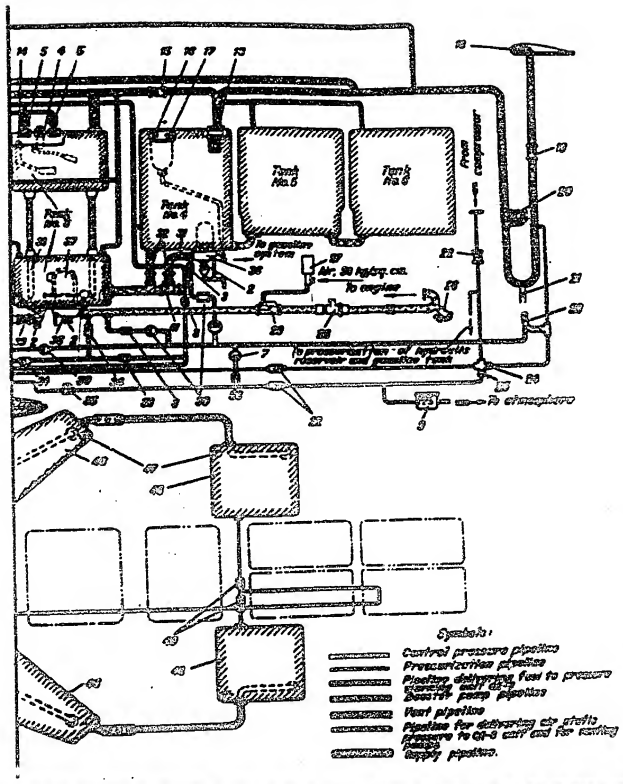

Fig.63. Key Diagram of Fuel System

1 – booster pump 422A; 2 – drain valve; 3 – throttle, dia. 8.5 mm; 4 – float valves in tanks No.1 and No.3; 5 – float valve filter; 6 – throttle, dia. 2.1 ±0.1 mm; 7 – pressure warning unit CAVT-0.25; 8 – vent valve of wing tank consumption system; 9 – safety valve here; 10 – vent valve of wing tank filling system; 11 – interconnecting pipe between tanks No.1 and No.3; 12 – branch pipe for filling wing tanks; 13 – fuel filler neck; 14 – low level fuel warning transmitter (CT3-127); 15 – non-return valve; 16 – gasoline tank filler neck; 17 – gasoline tank; 18 – velocity head tanks branch pipe; 19 – non- return valve with port, dia. 3 mm; 20 – safety valves; 21 – throttle, dia. 8 mm; 22 – non-return valves; 23 – special connections; 24 – throttle, dia. 3 mm; 25 – throttle, dia. 2 mm; 26 – drain valve; 27 – electromagnetic valve [illegible]; 28 – fuel-level transmitter PTC-12A; 29 – shut-off valve; 30 – pressure warning unit; 31 – throttle, dia. 23 mm; 32 – non-return valves; 33 – control pressure filter; 34 – non-return valves; 35 – vacuum valve; 36 – booster pump 4[illegible]; 37 – inverted flight valve; 38 – non-return valves; 39 – pipeline with non-return valve; 40 – throttle, dia. 17 mm; 41 – special valve; 42 – non-return valve; 43 – drop tank filler neck; 44 – branch pipe with non-return valve; 45 – gauge filter; 46 – drain plugs; 47 – rear wing tanks; 48 – throttles, dia. 7 mm; 49 – non-return valves; 50 – protective gauze; 51 – non-return valves for wing tanks filling; 52 – throttle, dia. 1 mm.

SECRET
NO FOREIGN DISSEM

50X1-HUM

POOR ORIGINAL

Sanitized Copy Approved for Release 2011/02/18 : CIA-RDP82-00038R001700250001-7

Sanitized Copy Approved for Release 2011/02/18 : CIA-RDP82-00038R001700250001-7

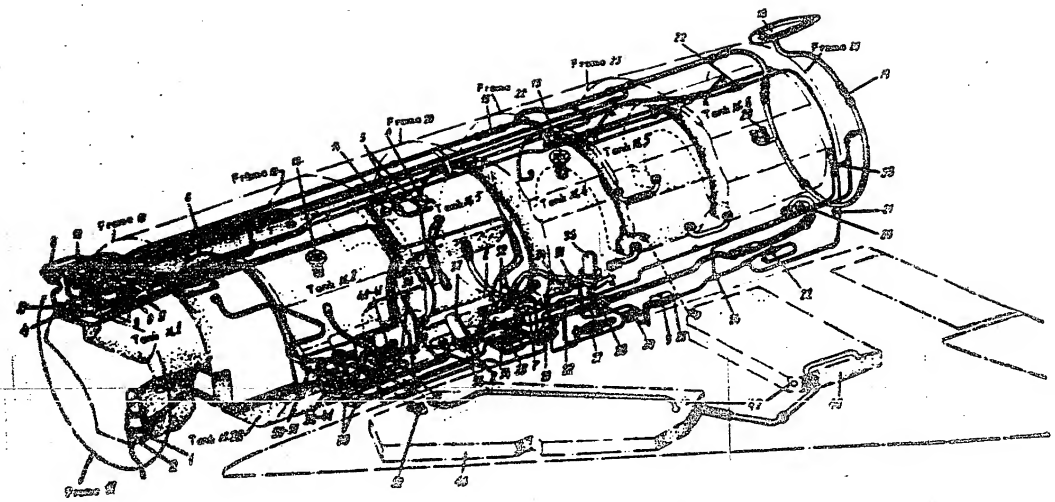

Fig.64. Fuel System Component Parts(For keys to ref. numbers see Fig.63)

50X1-HUM

POOR ORIGINAL

Sanitized Copy Approved for Release 2011/02/18 : CIA-RDP82-00038R001700250001-7

Sanitized Copy Approved for Release 2011/02/18 : CIA-RDP82-00038R001700250001-7

SECRET
NO FOREIGN DISSEM

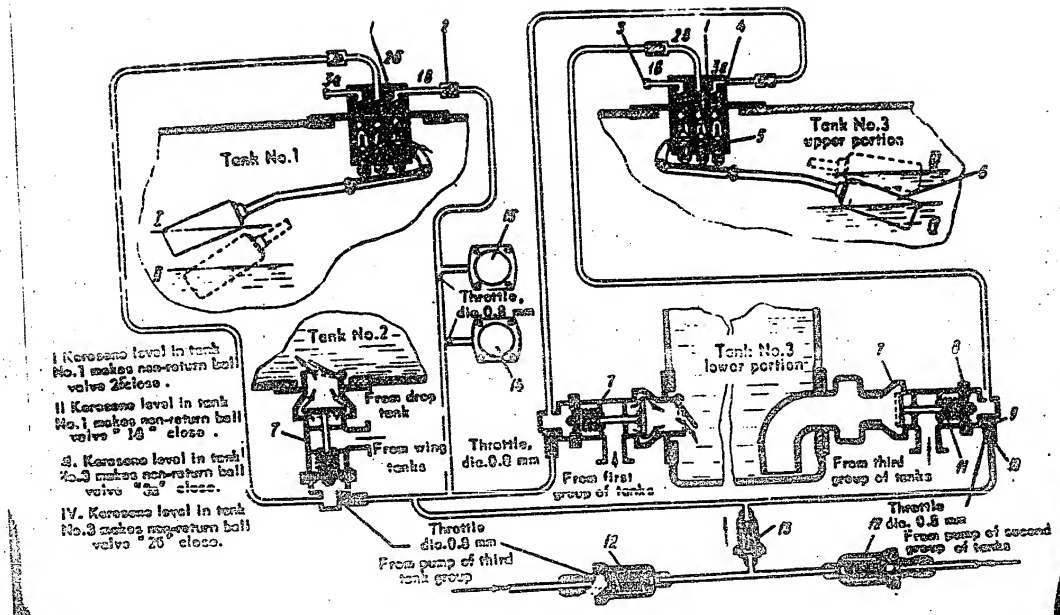

Fig.65. Operational Diagram of Special and Float Valves

1 – float valves; 2 – float valve filters; 3 – plugs 4 – non-return ball valve; 5 – floating rods; 6 – floats; 7 – special valves; 8 – diaphragm; 9 – protective washer; 10 – non-return ball valve; 11 – special valve spring 12 – non-return valves; 13 – control [illegible] filter; 14 – vent valve of wing tanks filling system; 15 – vent valve of wing tanks consumption system.

50X1-HUM

POOR ORIGINAL

Sanitized Copy Approved for Release 2011/02/18 : CIA-RDP82-00038R001700250001-7

Sanitized Copy Approved for Release 2011/02/18 : CIA-RDP82-00038R001700250001-7

SECRET
NO FOREIGN DISS-1

Fuel consumption diagram.

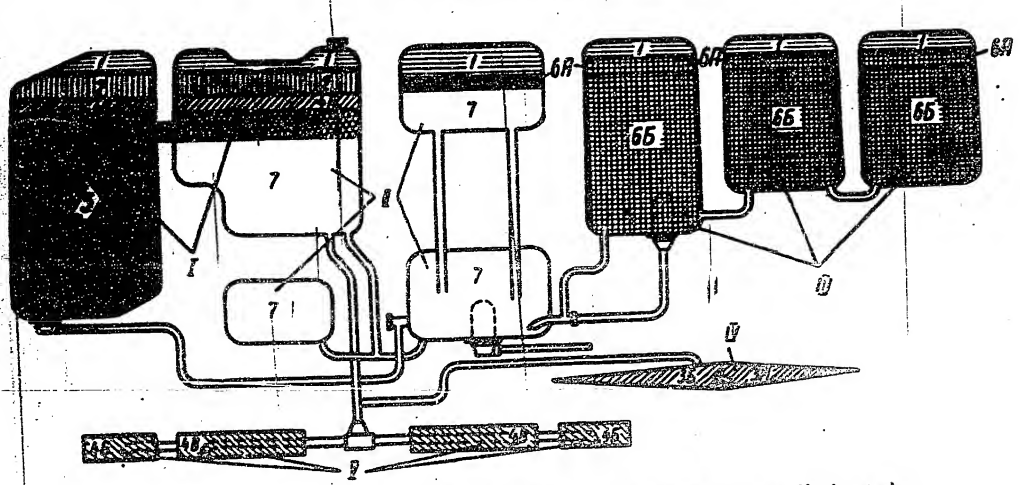

Note: I - group of fuselage tanks; II - group of fuselage tanks; III - group of fuselage tanks; IV - drop tank; V - wing tanks; 1, 2, 3А, 3Б; 4 А; 4Б; 5; 6А; 6Б; 7 - sequence of consumption; 7 - low fuel level making warning lamp "5Б" lit, remainder come on (at about 100 amps).

Fig.66. Diagram of Fuel Consumption

SECRET
NO FOREIGN DISSEM

50X1-HUM

POOR ORIGINAL

Sanitized Copy Approved for Release 2011/02/18 : CIA-RDP82-00038R001700250001-7

Sanitized Copy Approved for Release 2011/02/18 : CIA-RDP82-00038R001700250001-7

50X1-HUM

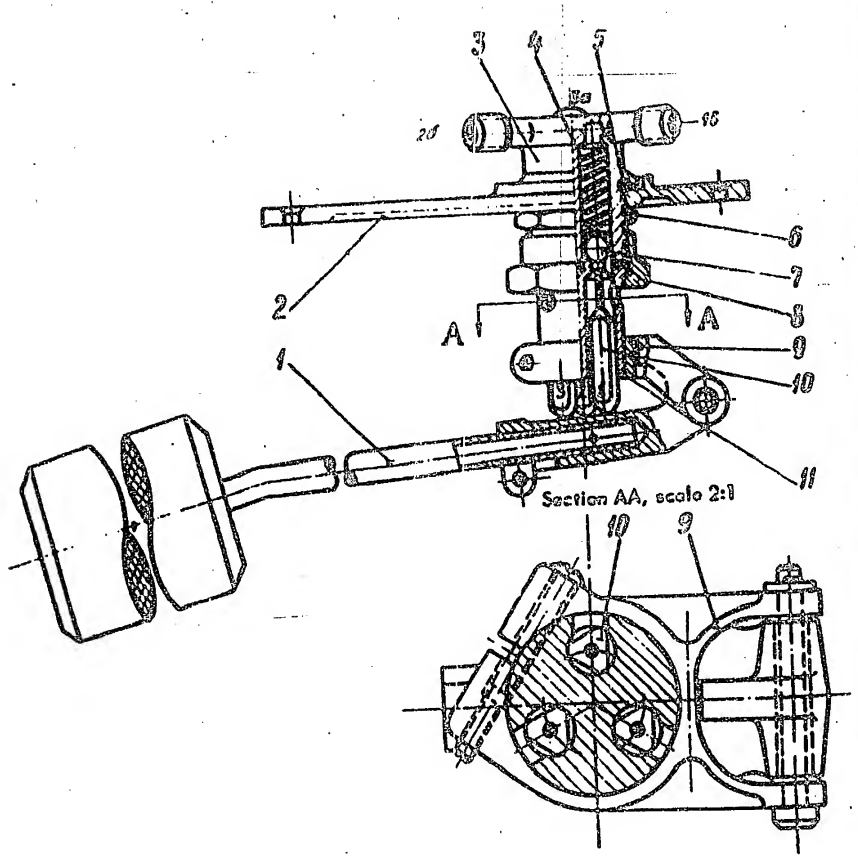

Fig.67. Float Valve

1 – float lever; 2 – plate; 3 – body; 4 – spring; 5 – rubber ring; 6 – nut; 7 – ball; 8 – union nut; 9 – bracket; 10 – floating rod; 11 – bush.

FOR OFFICIAL USE ONLY

Sanitized Copy Approved for Release 2011/02/18 : CIA-RDP82-00038R001700250001-7

Sanitized Copy Approved for Release 2011/02/18 : CIA-RDP82-00038R001700250001-7

SECRET
NO FOREIGN DISSEM

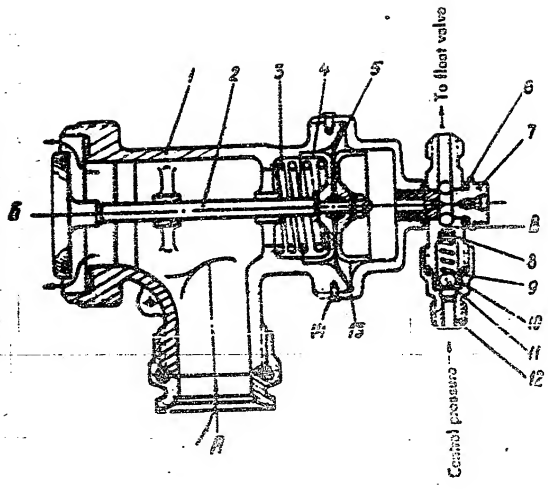

Fig.68. Special Valve

A – from booster pump line; B – to tank; B – throttling pin, dia. 0.8 mm; 1 – body; 2 – valve; 3 – spring; 4 – sliding protective washer; 5 – rubber diaphragm; 6 – packing; 7 – clamp; 8 – protective washer; 9 – spring; 10 – body; 11 – ball; 12 – connection; 13 – cover; 14 – screw.

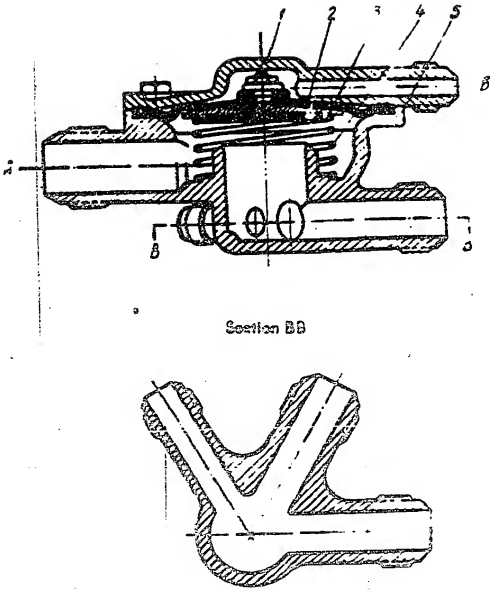

Fig.69. Vent Valve

1 – cover; 2 – diaphragm; 3 – valve; 4 – spring; 5 – body.

50X1-HUM

POOR ORIGINAL

Sanitized Copy Approved for Release 2011/02/18 : CIA-RDP82-00038R001700250001-7

Sanitized Copy Approved for Release 2011/02/18 : CIA-RDP82-00038R001700250001-7

SECRET
NO FOREIGN DISSEM

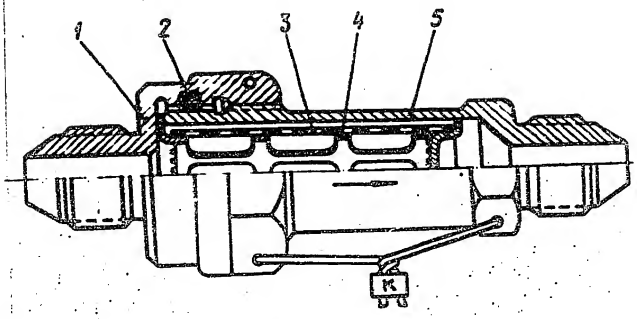

Fig.70. Control Pressure Filter
1 — cap; 2 — rubber ring; 3 — gauze; 4 — framework; 5 — body.

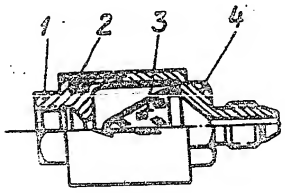

Fig.71. Float Valve Filter
1 — connection; 2 — ring; 3 — gauze; 4 — body.

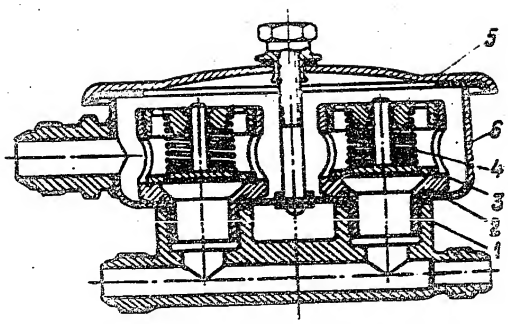

Fig.72. Safety Valves Box
1 — body; 2 — valve body; 3 — valve; 4 — spring; 5 — cover; 6 — box.

SECRET
NO FOREIGN DISSEM

50X1-HUM

POOR ORIGINAL

Sanitized Copy Approved for Release 2011/02/18 : CIA-RDP82-00038R001700250001-7

Sanitized Copy Approved for Release 2011/02/18 : CIA-RDP82-00038R001700250001-7

SECRET
NO FOREIGN DISSEM

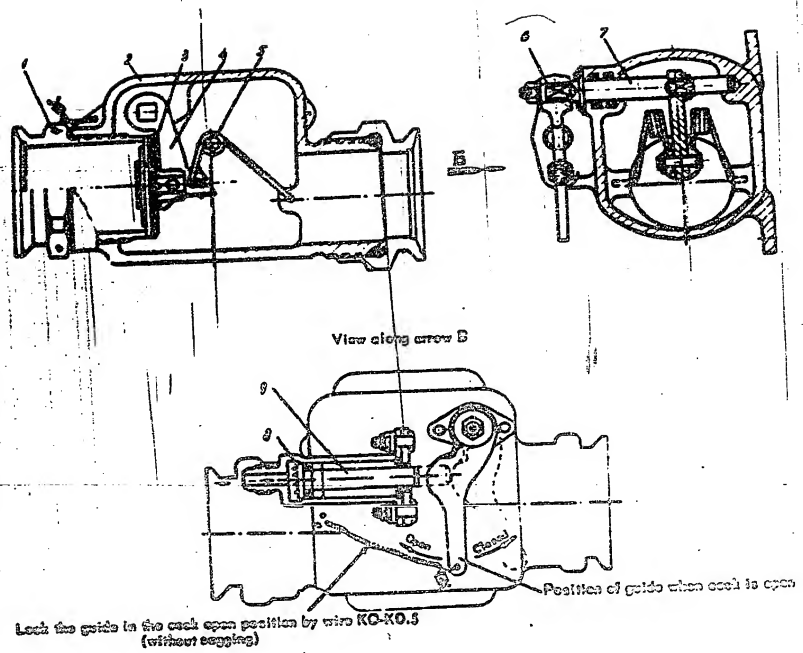

Fig.78. Shut-Off Cock

1 – connection; 2 – body; 3 – valve; 4 – lever; 5 – spring; 6 – guide; 7 – cover; 8 – cylinder; 9 – piston.

50X1-HUM

POOR ORIGINAL

Sanitized Copy Approved for Release 2011/02/18 : CIA-RDP82-00038R001700250001-7

Sanitized Copy Approved for Release 2011/02/18 : CIA-RDP82-00038R001700250001-7

SECRET
NO FOREIGN DISSEM

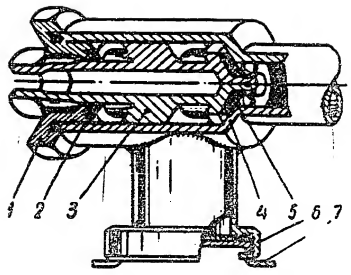

Operation diagram

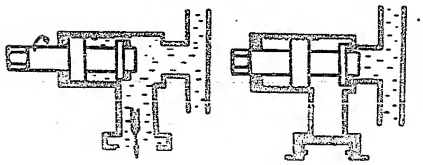

Fig.74. Drain Valve
1 – nut; 2 – rubber gasket; 3 – rod; 4 – body; 5 – valve; 6 – drain connection; 7 – plug.

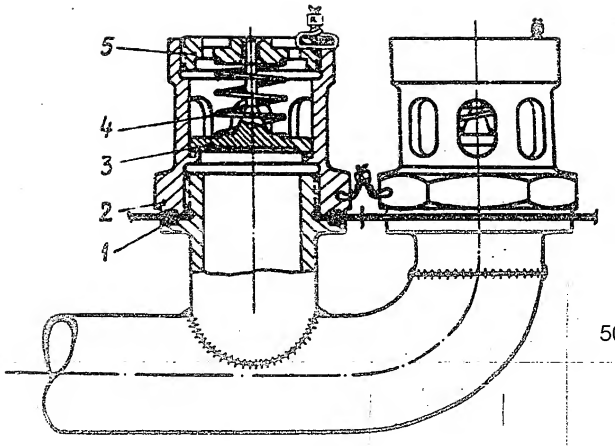

Fig.75. Safety Valves
1 – gasket; 2 – body; 3 – valve; 4 – spring; 5 – cover.

SECRET
NO FOREIGN DISSEM

50X1-HUM

POOR ORIGINAL

Sanitized Copy Approved for Release 2011/02/18 : CIA-RDP82-00038R001700250001-7

Sanitized Copy Approved for Release 2011/02/18 : CIA-RDP82-00038R001700250001-7

SECRET
NO FOREIGN DISSEM

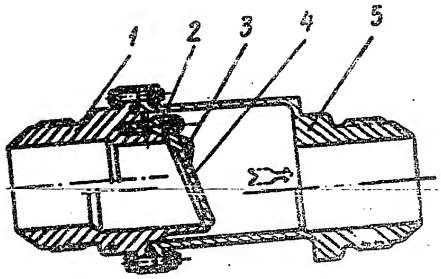

Fig.76. Non-Return Valve
1 – connection; 2 – lug 3 – spring 4 – flap valve; 5 – body.

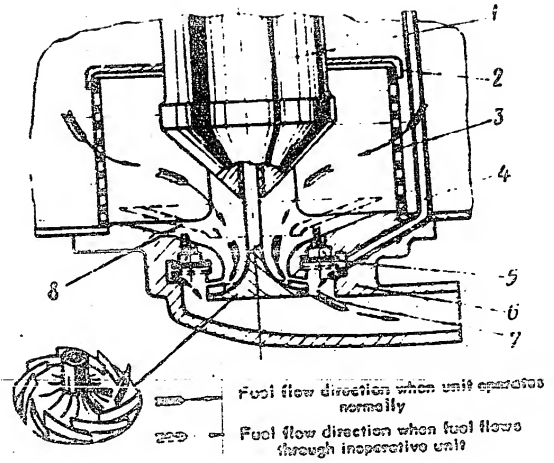

Fig.77. Operation Diagram of Unit 495A-2
1 – electric motor; 2 – body flange; 3 – gauze filter; 4 – by-pass pipe; 5 – non-return valve; 6 – body; 7 – impeller; 8 – deflector (only for unit 422A).

50X1-HUM

POOR ORIGINAL

Sanitized Copy Approved for Release 2011/02/18 : CIA-RDP82-00038R001700250001-7

Sanitized Copy Approved for Release 2011/02/18 : CIA-RDP82-00038R001700250001-7

50X1-HUM

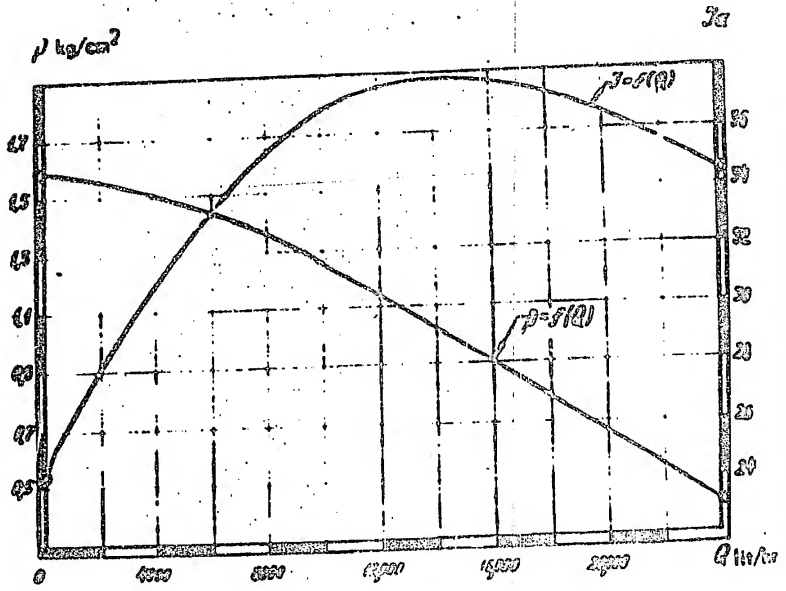

Fig.78. Graph Showing Pressure and Current Intensity Versus Unit 495A Capacity

FOR OFFICIAL USE ONLY

Sanitized Copy Approved for Release 2011/02/18 : CIA-RDP82-00038R001700250001-7

Sanitized Copy Approved for Release 2011/02/18 : CIA-RDP82-00038R001700250001-7

50X1-HUM

POOR ORIGINAL

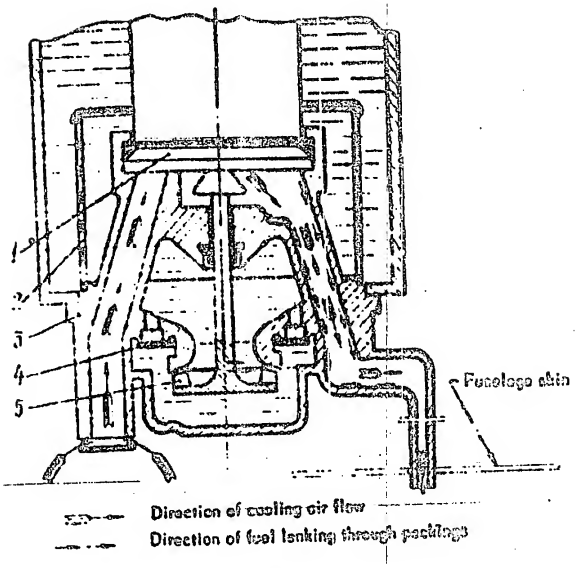

Fig.79. Diagram of Cooling Electric Motor of Unit 403A-2
1 – electric motor; 2 – gauze filter; 3 – body; 4 – valve; 5 – impeller.

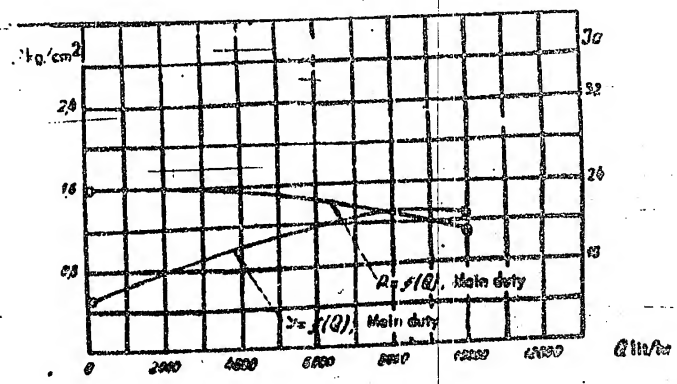

Fig.80. Graph Representing Pressure and Current Intensity versus Capacity of Unit 422A

Sanitized Copy Approved for Release 2011/02/18 : CIA-RDP82-00038R001700250001-7

Sanitized Copy Approved for Release 2011/02/18 : CIA-RDP82-00038R001700250001-7

SECRET
NO FOREIGN DISSEM

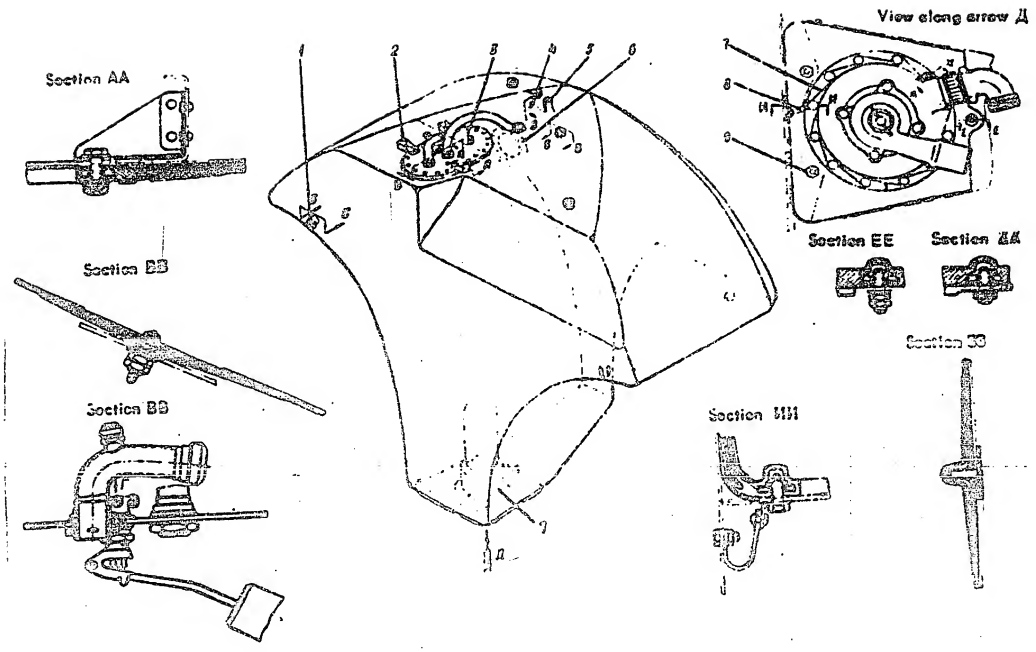

50X1-HUM

Fig.81. Tank No.1

1 – pin; 2 – bracket; 3 – plate; 4 – screw; 5 – soft pipe union; 6 – flange; 7 – unit 4224; 8 – loading jumper; 9 – stud.

POOR ORIGINAL

Sanitized Copy Approved for Release 2011/02/18 : CIA-RDP82-00038R001700250001-7

Sanitized Copy Approved for Release 2011/02/18 : CIA-RDP82-00038R001700250001-7

SECRET
NO FOREIGN DISSEM

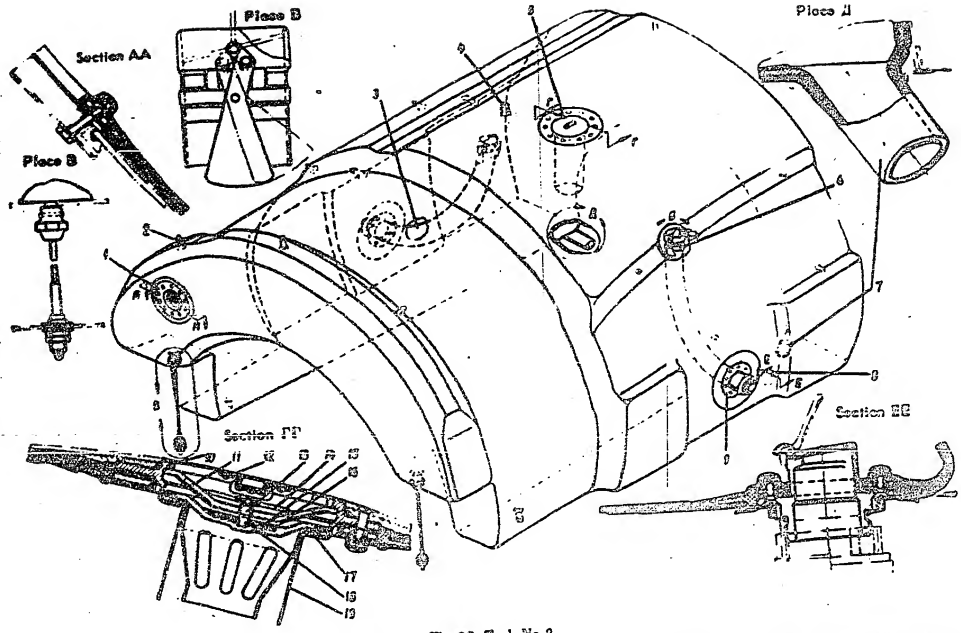

Fig.82. Tank No.2

1 – flange; 2 – pin; 3 – connections for filling wing tanks; 4 – vent pipe union; 5 – filler; 6 – inertia valves; 7 – soft pipe union; 8 – return valve; 9 – side flanges; 10 – filler body; 11 – crosspiece; 12 – access panel; 13 – screw; 14 – small plate; 15 – disc; 16 – locking ring; 17 – cover; 18 – locking washer; 19 – screen filter.

SECRET
NO FOREIGN DISSEM

50X1-HUM

POOR ORIGINAL

Sanitized Copy Approved for Release 2011/02/18 : CIA-RDP82-00038R001700250001-7

Sanitized Copy Approved for Release 2011/02/18 : CIA-RDP82-00038R001700250001-7

50X1-HUM

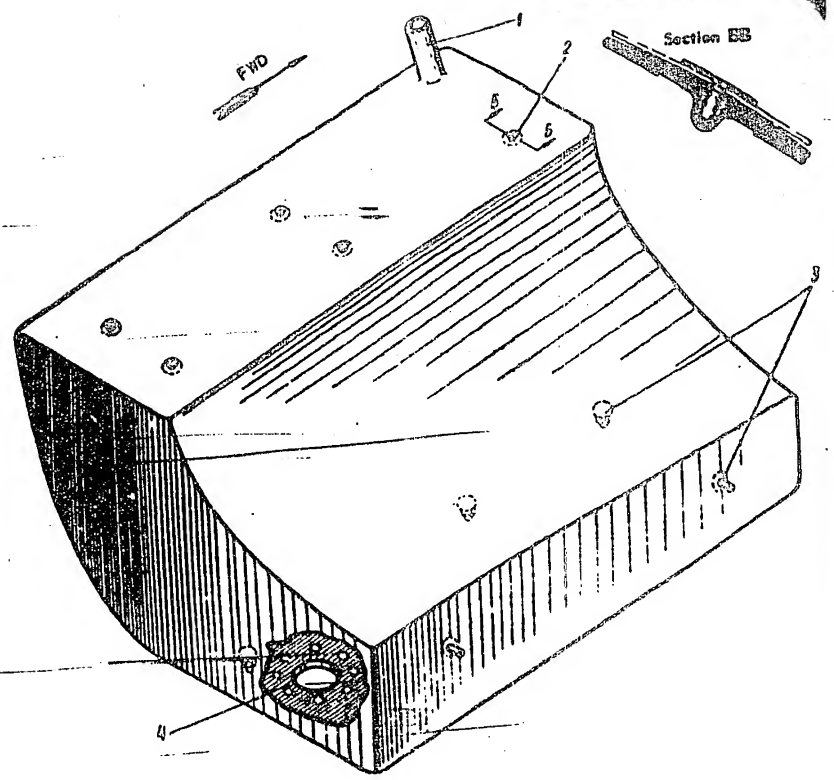

Fig.63. Tank No.2a
1 – soft pipe union; 2 – screw; 3 – plug; 4 – flange.

POOR ORIGINAL

Sanitized Copy Approved for Release 2011/02/18 : CIA-RDP82-00038R001700250001-7

Sanitized Copy Approved for Release 2011/02/18 : CIA-RDP82-00038R001700250001-7

50X1-HUM

POOR ORIGINAL

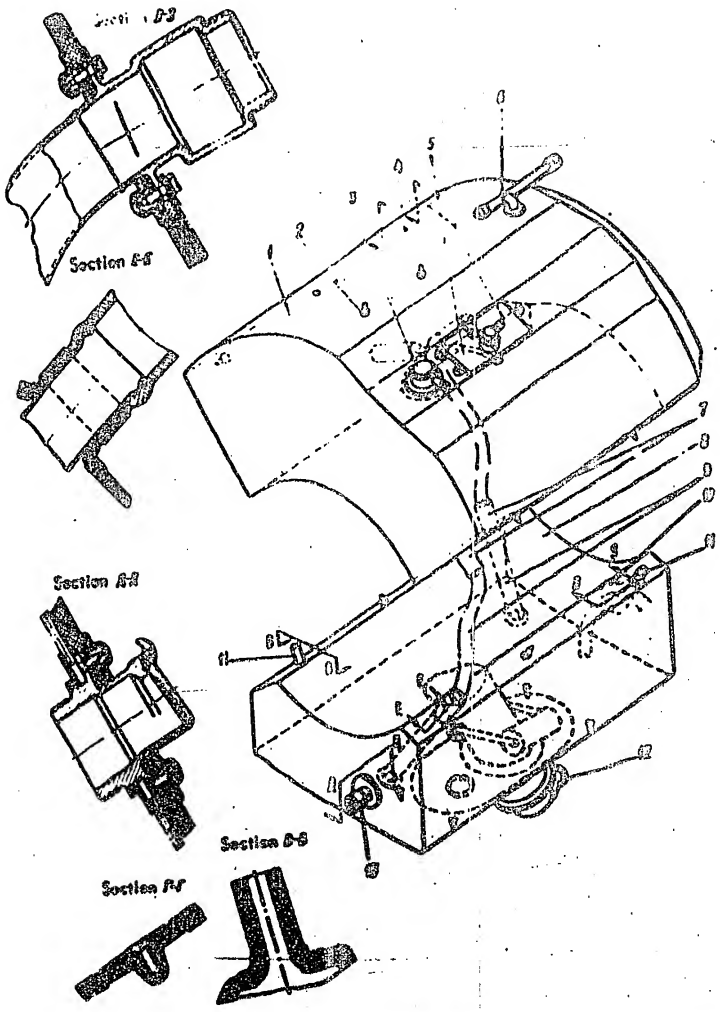

Fig.84. Tank No.3

1 – tank upper half; 2 – pipe; 3 – fuel low level warning unit СЭ-1637; 4 – screw; 5 – float valve; 6 – vent connection; 7 – soft pipe union; 8 – tank lower half; 9 – connecting pipes; 10 – connection; 11 – soft pipe union; 12 – unit 605А-1; 13 – return valve.

Sanitized Copy Approved for Release 2011/02/18 : CIA-RDP82-00038R001700250001-7

Sanitized Copy Approved for Release 2011/02/18 : CIA-RDP82-00038R001700250001-7

Fig.23. Inverted Flight Valve

50X1-HUM

POOR ORIGINAL

Sanitized Copy Approved for Release 2011/02/18 : CIA-RDP82-00038R001700250001-7

Sanitized Copy Approved for Release 2011/02/18 : CIA-RDP82-00038R001700250001-7

SECRET
NO FOREIGN DISS-1

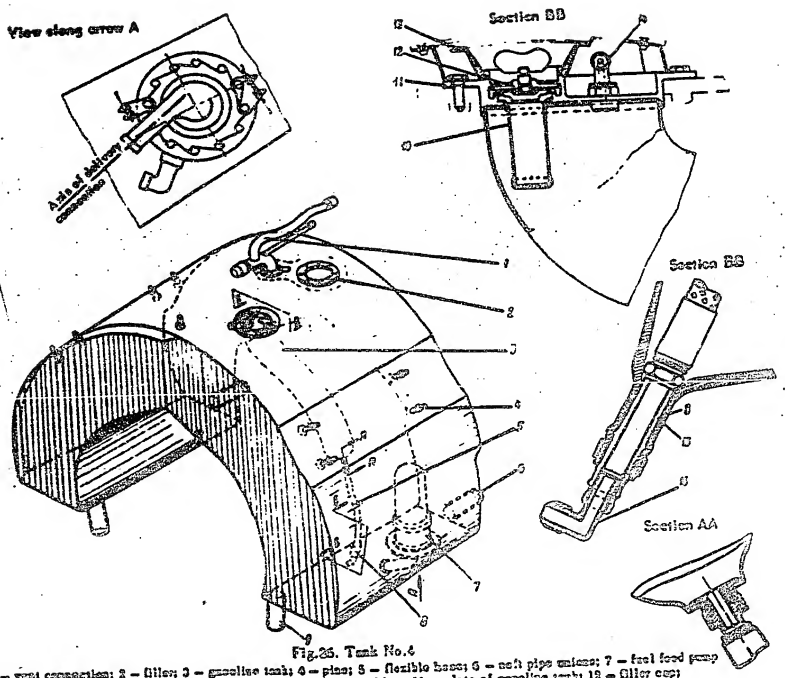

Fig.25. Tank No.4

1 – vent connection; 2 – filler; 3 – gasoline tank; 4 – pipe; 5 – flexible hose; 6 – soft pipe unions; 7 – fuel feed pump GSA-2; 8 – soft pipe union; 9 – soft pipe union; 10 – screen filter; 11 – plate of gasoline tank; 12 – filler cap; 13 – funnel; 14 – pressurization pipe union; 15 – hose nozzle; 16 – pipe union.

50X1-HUM

POOR ORIGINAL

Sanitized Copy Approved for Release 2011/02/18 : CIA-RDP82-00038R001700250001-7

Sanitized Copy Approved for Release 2011/02/18 : CIA-RDP82-00038R001700250001-7

50X1-HUM

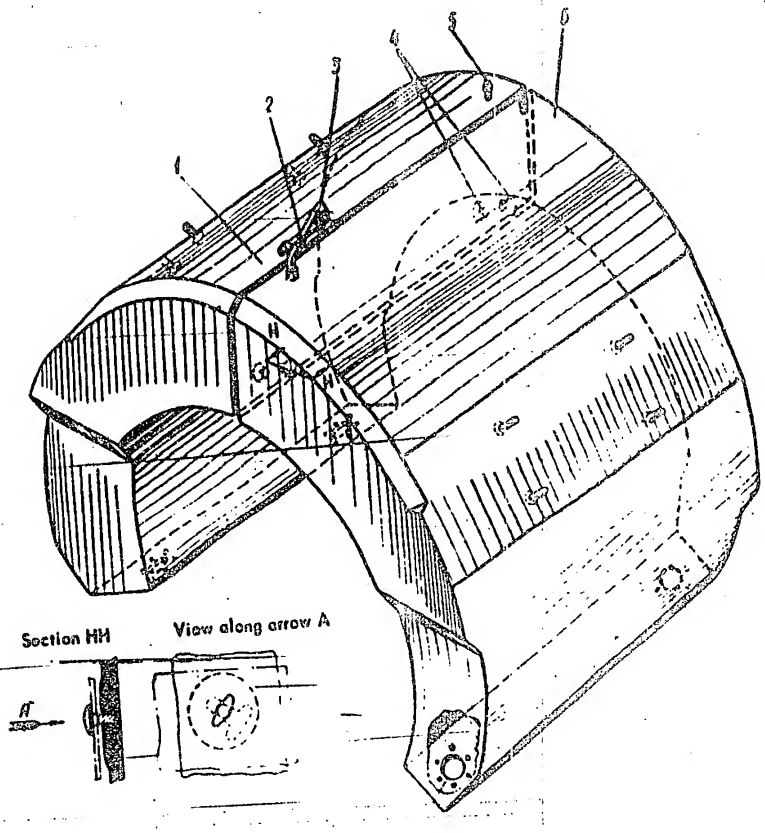

Fig.87. Tank No.5

1 – tank right-hand part; 2 – vent pipe; 3 – soft pipe union; 4 – fastener; 5 – pin; 6 – tank left-hand part; 7 – flange.

Sanitized Copy Approved for Release 2011/02/18 : CIA-RDP82-00038R001700250001-7

Sanitized Copy Approved for Release 2011/02/18 : CIA-RDP82-00038R001700250001-7

50X1-HUM

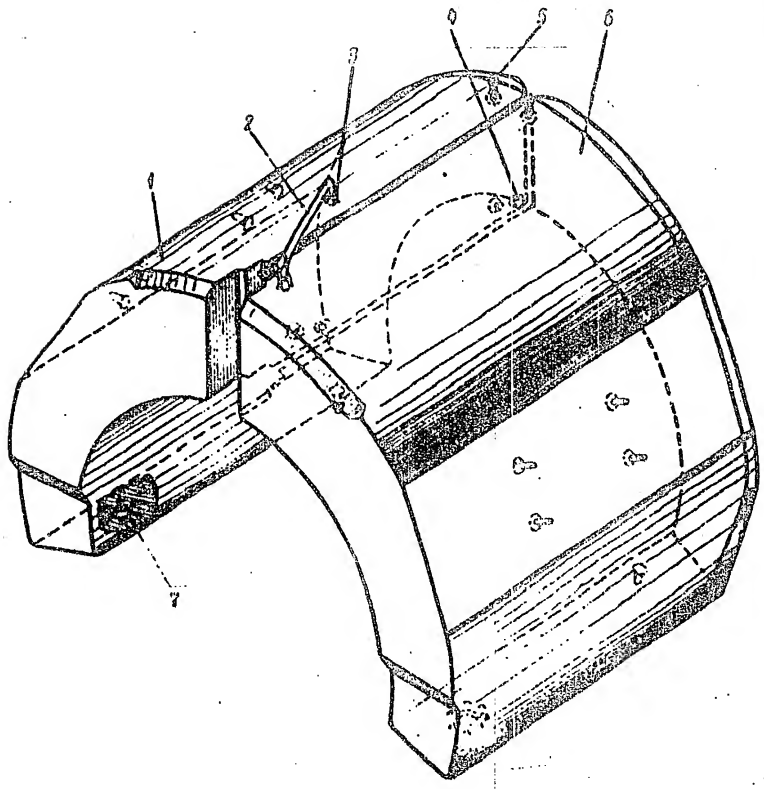

Fig.58. Tank No.6

1 – tank right-hand part; 2 – vent pipe line; 3 – soft pipe union; 4 – fastenerr; 5 – pin; 6 – tank left-hand part; 7 – flange.

Sanitized Copy Approved for Release 2011/02/18 : CIA-RDP82-00038R001700250001-7

Sanitized Copy Approved for Release 2011/02/18 : CIA-RDP82-00038R001700250001-7

SECRET
NO FOREIGN DISSEM

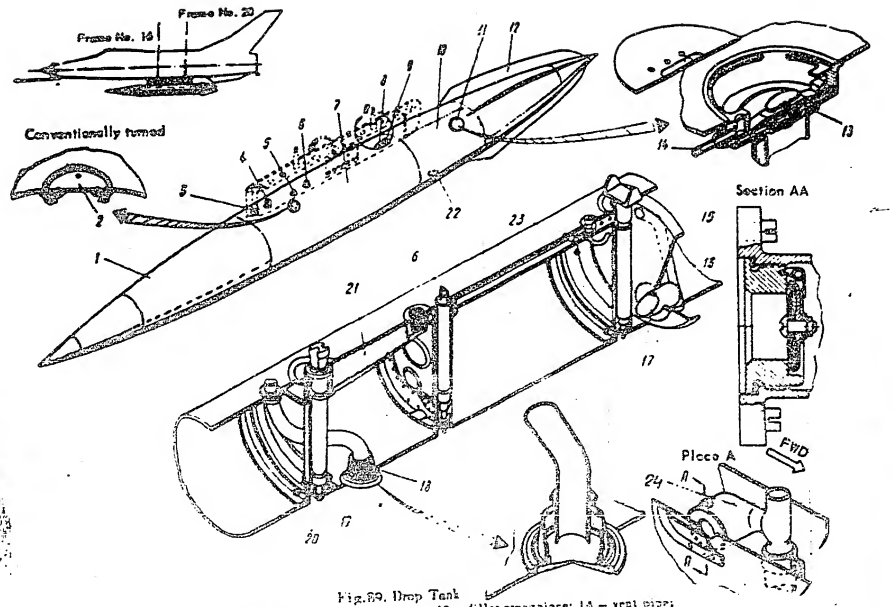

Fig.59. Drop Tank

1 – tank front part; 2 – drain nut; 3 – consumption pipe union; 4 – front rent; 5 – bushing for explosive pusher; 6 – eye-bolt; 7 – tank middle part; 8 – pressurization pipe union; 9 – rear rent; 10 – tank rear part; 11 – filler; 12 – stabilizer plate; 13 – filler cross-piece; 14 – vent pipe; 15 – partition; 16 – by-pass pipe; 17 – return valve; 18 – screen filter; 19 – drain plug cap; 20 – profiles; 21 – beam; 22 – drain plug; 23 – pressurization pipe; 24 – vacuum valve

SECRET
NO FOREIGN DISSEM

50X1-HUM

POOR ORIGINAL

Sanitized Copy Approved for Release 2011/02/18 : CIA-RDP82-00038R001700250001-7

Sanitized Copy Approved for Release 2011/02/18 : CIA-RDP82-00038R001700250001-7

SECRET
NO FOREIGN DISSEM

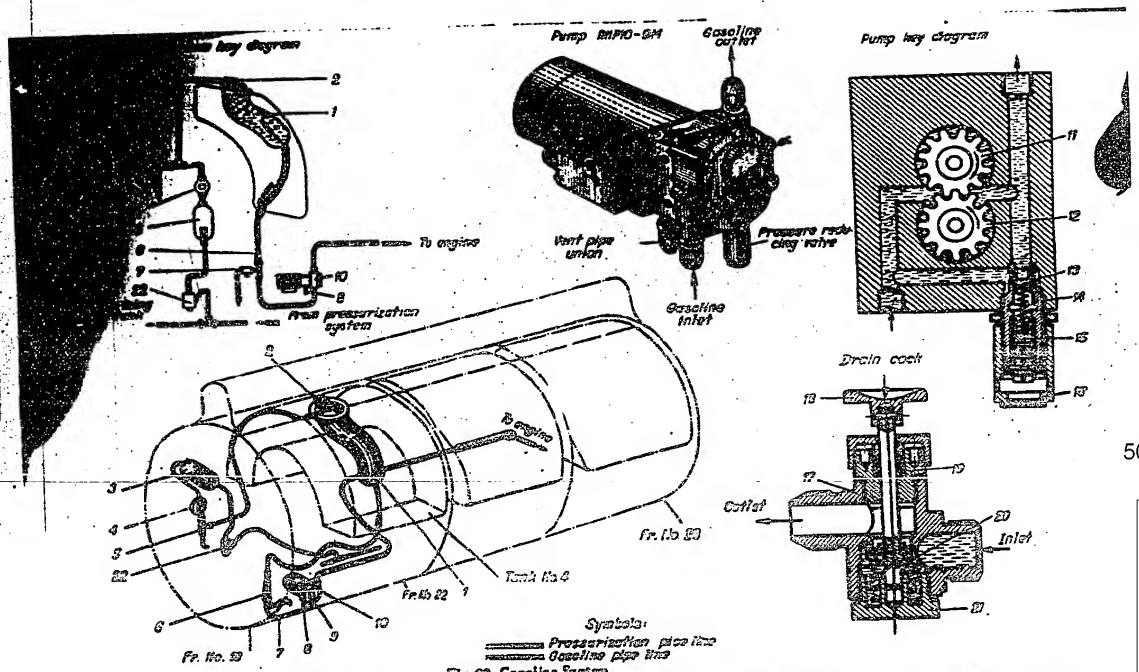

Fig.90. Gasoline System

1 – gasoline tank; 2 – filler; 3 – pressurization unit; 4 – PB-0.4 reducer; 5 – return and safety valves; 6 – screen filter; 7 – drain cock; 8 – drain pipe; 9 – reducing valve; 10 – pump; 11 – driving gear; 12 – driven gear; 13 – cap; 14 – valve body; 15 – adjusting screw; 16 – cap; 17 – drain cock body; 18 – knob; 19 – rod; 20 – valve; 21 – cover; 22 – moisture trap.

SECRET
NO FOREIGN DISSEM

50X1-HUM

POOR ORIGINAL

Sanitized Copy Approved for Release 2011/02/18 : CIA-RDP82-00038R001700250001-7

Sanitized Copy Approved for Release 2011/02/18 : CIA-RDP82-00038R001700250001-7

SECRET
NO FOREIGN DISSEM

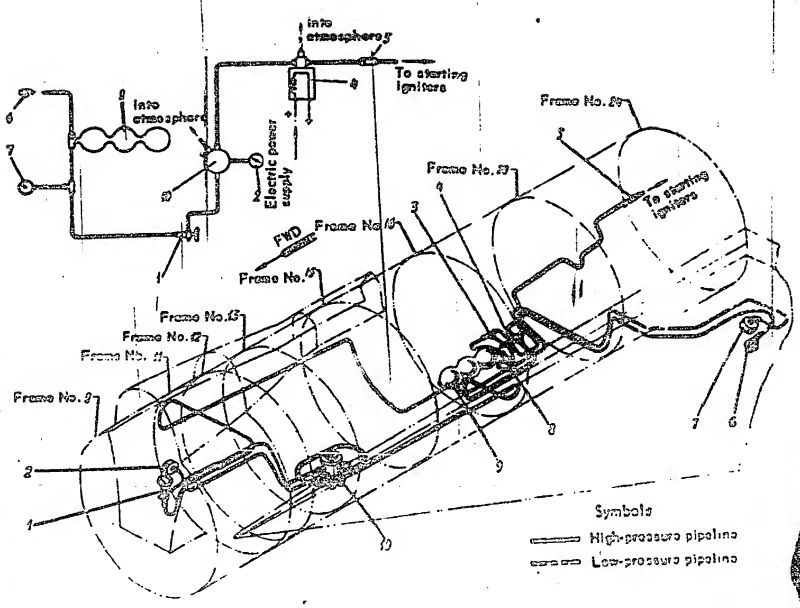

Fig.91. Oxygen Feed System. Arrangement and Key Diagrams

1 – oxygen valve KB-25IC; 2 – pressure gauge MK-16; 3 – T-piece; 4 – electropneumatic valve 6944[illegible]; 5 – return valve; 6 – charging connection 11100; 7 – pressure gauge MK-12M; 8 – T-piece with return valve; 9 – oxygen bottle; 10 – [illegible] reducer 2130A.

SECRET
NO FOREIGN DISSEM

50X1-HUM

POOR ORIGINAL

Sanitized Copy Approved for Release 2011/02/18 : CIA-RDP82-00038R001700250001-7

Sanitized Copy Approved for Release 2011/02/18 : CIA-RDP82-00038R001700250001-7

50X1-HUM

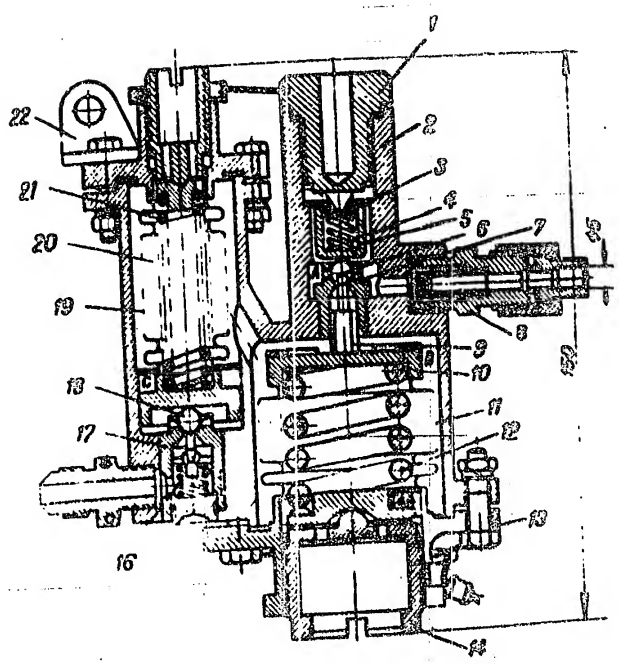

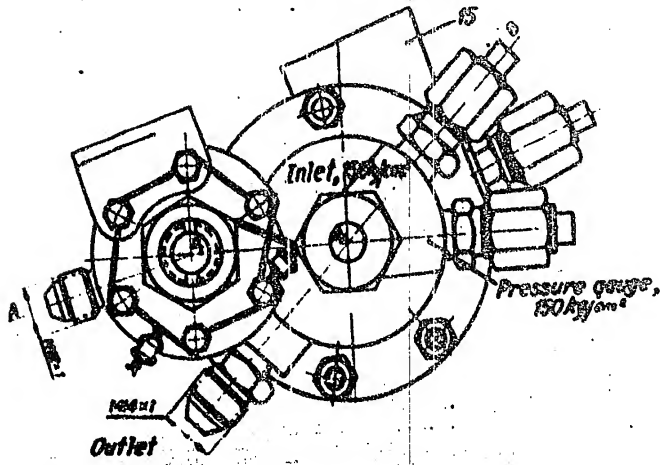

Fig.92. Oxygen Reducer 2180 A

1 – plug; 2 – body; 3 – plate; 4 – springs; 5 – valve; 6 – ball; 7 – seat; 8 – pipe union; 9 – tapper; 10 – bushings; 11 – sylphon; 12 – springs; 13 – flange; 14 – plug; 15 – eyes; 16 – springs; 17 – safety valve seat; 18 – ball; 19 – sylphon; 20 – safety valve; 21 – springs; 22 – eye.

Sanitized Copy Approved for Release 2011/02/18 : CIA-RDP82-00038R001700250001-7

Sanitized Copy Approved for Release 2011/02/18 : CIA-RDP82-00038R001700250001-7

50X1-HUM

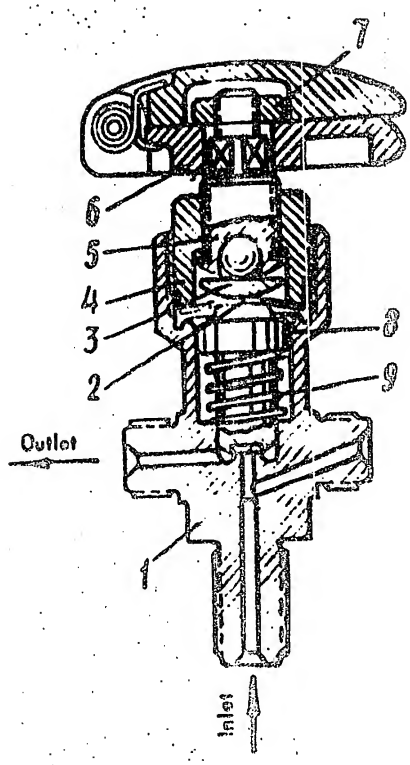

Fig.93. Oxygen Valve KB-2MC
1 – body; 2 – membrane; 3 – segment; 4 – plug; 5 – spindle; 6 – handwheel; 7 – nut; 8 – valve; 9 – spring.

POOR ORIGINAL

Sanitized Copy Approved for Release 2011/02/18 : CIA-RDP82-00038R001700250001-7

Sanitized Copy Approved for Release 2011/02/18 : CIA-RDP82-00038R001700250001-7

SECRET
NO FOREIGN DISSEM

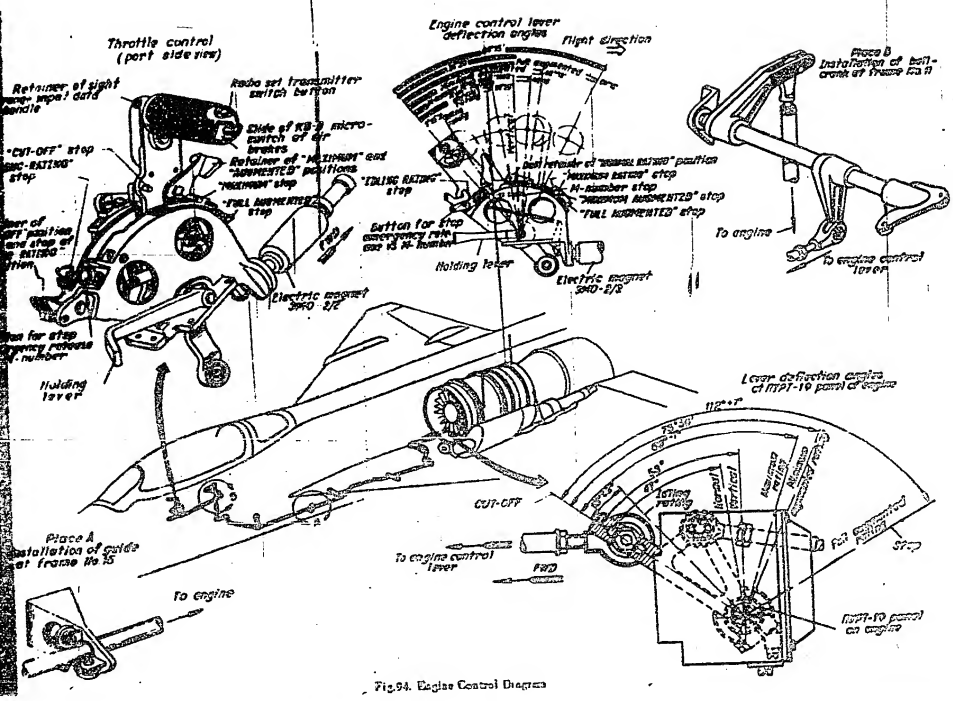

Fig.94. Engine Control Diagram

SECRET
NO FOREIGN DISSEM

50X1-HUM

POOR ORIGINAL

Sanitized Copy Approved for Release 2011/02/18 : CIA-RDP82-00038R001700250001-7

Sanitized Copy Approved for Release 2011/02/18 : CIA-RDP82-00038R001700250001-7

50X1-HUM

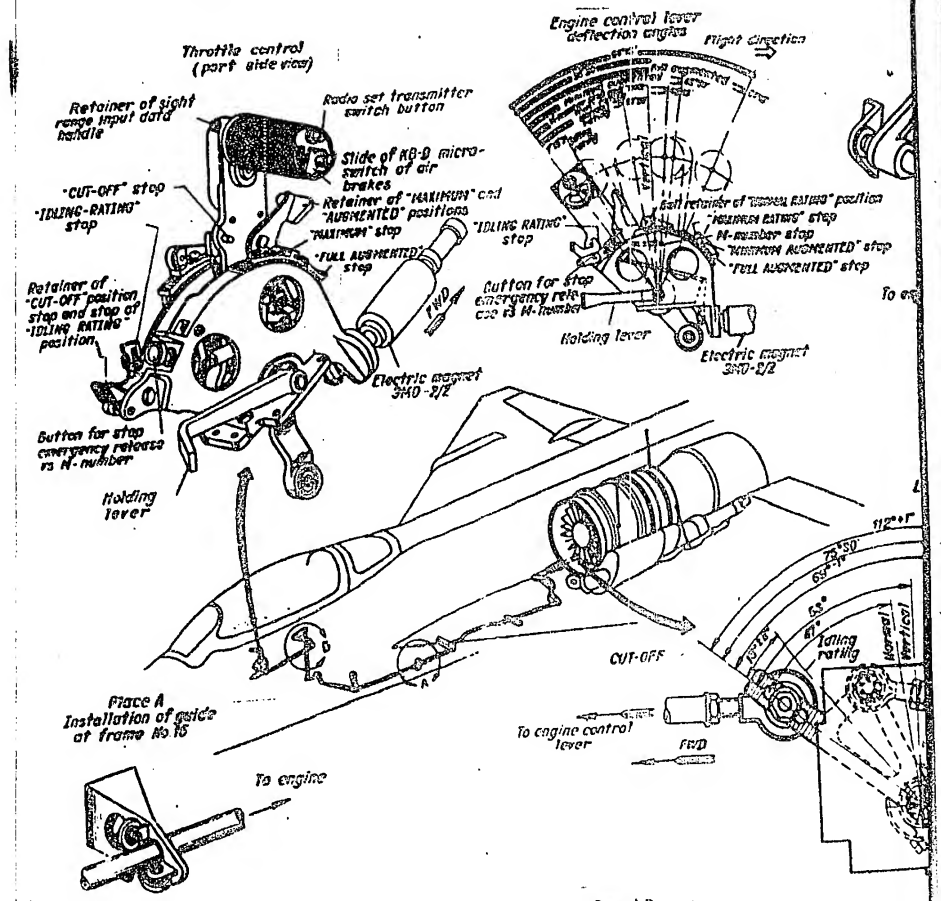

Fig.94. Engine Control Diagram

POOR ORIGINAL

Sanitized Copy Approved for Release 2011/02/18 : CIA-RDP82-00038R001700250001-7

Sanitized Copy Approved for Release 2011/02/18 : CIA-RDP82-00038R001700250001-7

SECRET
NO FOREIGN DISSEM

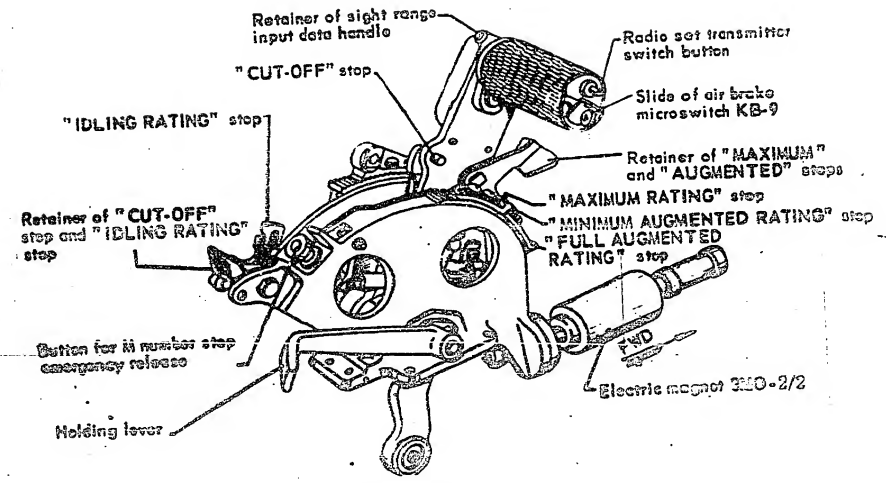

Fig.98. Throttle Control

SECRET
NO FOREIGN DISSEM

50X1-HUM

POOR ORIGINAL

Sanitized Copy Approved for Release 2011/02/18 : CIA-RDP82-00038R001700250001-7

Sanitized Copy Approved for Release 2011/02/18 : CIA-RDP82-00038R001700250001-7

50X1-HUM

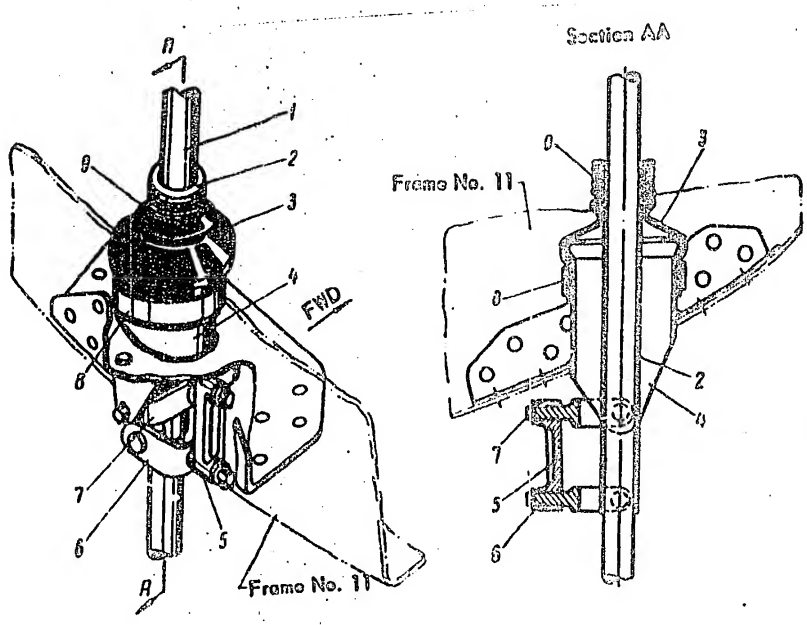

Fig.96. Pressure Sealing Unit

1 – engine control rod; 2 – bushing; 3 – sealing boot; 4 – sealing connection; 5 – shackle; 6 – clamps; 7 – clamp; 8 – collar; 9 – wire bend.

POOR ORIGINAL

Sanitized Copy Approved for Release 2011/02/18 : CIA-RDP82-00038R001700250001-7

Sanitized Copy Approved for Release 2011/02/18 : CIA-RDP82-00038R001700250001-7

POOR ORIGINAL

50X1-HUM

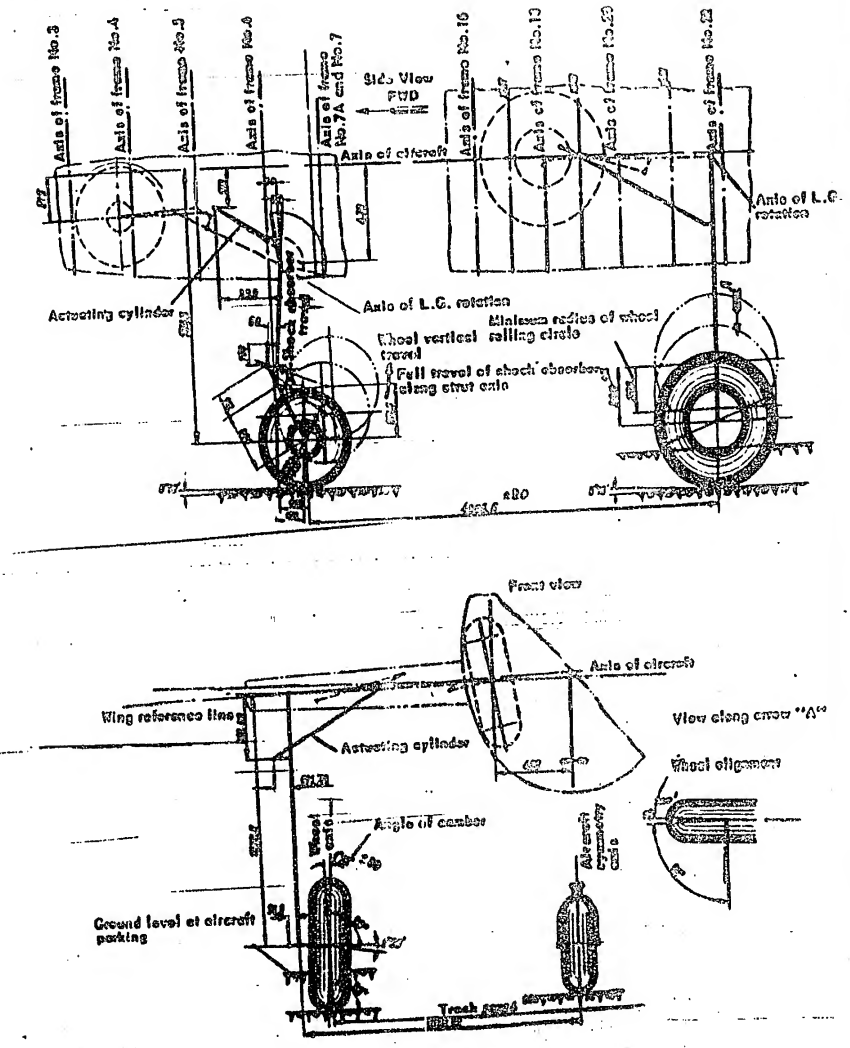

Fig.97. Leading Gear Geometrical Diagram

Sanitized Copy Approved for Release 2011/02/18 : CIA-RDP82-00038R001700250001-7

Sanitized Copy Approved for Release 2011/02/18 : CIA-RDP82-00038R001700250001-7

SECRET
NO FOREIGN DISSEM

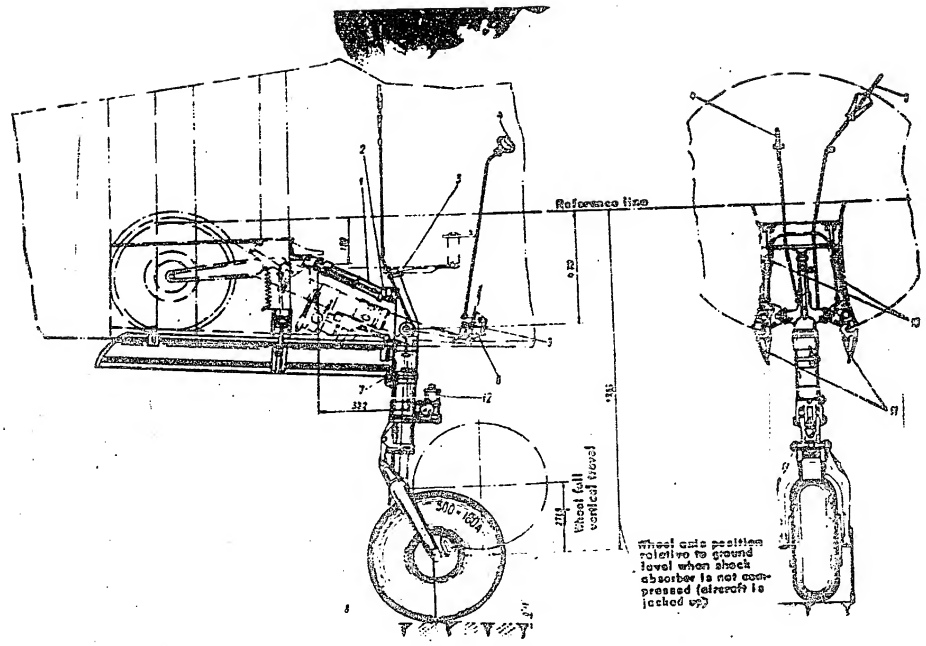

Fig.98. Nose Strut Assembly

1 – actuating cylinder; 2 – terminal switch of strut down position; 3 – nose strut support; 4 – independent strut extension control; 5 – terminal switch; 6 – up-lock; 7 – warning lamp; 8 – wheel KT-32; 9 – mechanical indicator; 10 – mechanism for opening and closing strut well doors; 11 – well doors; 12 – damper.

SECRET
NO FOREIGN DISSEM

50X1-HUM

POOR ORIGINAL

Sanitized Copy Approved for Release 2011/02/18 : CIA-RDP82-00038R001700250001-7

Sanitized Copy Approved for Release 2011/02/18 : CIA-RDP82-00038R001700250001-7

FOR OFFICIAL USE ONLY

50X1-HUM

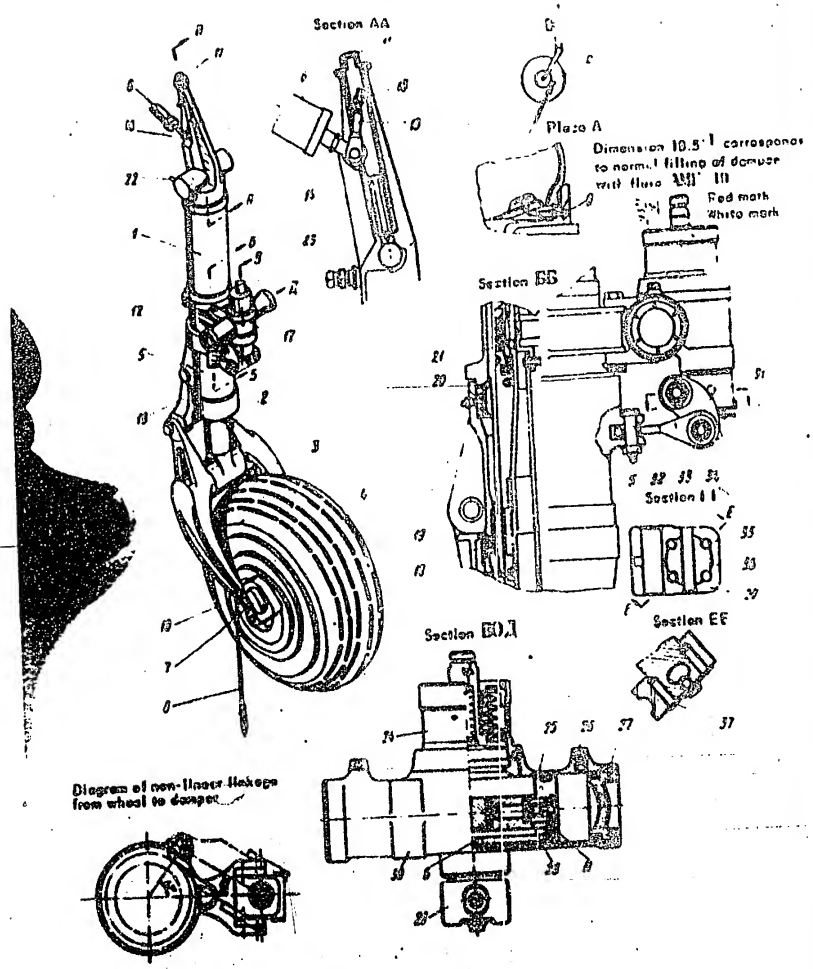

Fig.99. Landing Gear Nose Strut

1 – upper sleeve; 2 – rod; 3 – fork; 4 – wheel KT-36; 5 – lower attachment fitting with swivel coupling; 6 – hydraulic actuating cylinder; 7 – transmitter УА-24; 8 – ground cable; 9 – chamber charging connection; 10 – brake connection; 11 – fixing pin; 12 – indicating lamp; 13 – link; 14 – disc spring; 15 – bolt connecting link with fixing pin; 16 – bolt connecting link with actuating cylinder; 17 – damper; 18 – lower bearing ЦКБ-1126; 19 – tie rod; 20 – upper bearing ЦКБ-1123; 21 – balls (6 pieces arranged circumferentially) State Standard ГОСТ 3722-54; 22 – lubricator; 23 – shock absorber filler connection; 24 – compensator; 25 – plates; 26 – plug; 27 – cover; 28 – valve; 29 – collar; 30 – body; 31 – link; 32 – lubricator; 33 – bolt; 34 – bell-crank; 35 – pin; 36 – guide; 37 – washer.

Sanitized Copy Approved for Release 2011/02/18 : CIA-RDP82-00038R001700250001-7

Sanitized Copy Approved for Release 2011/02/18 : CIA-RDP82-00038R001700250001-7

50X1-HUM

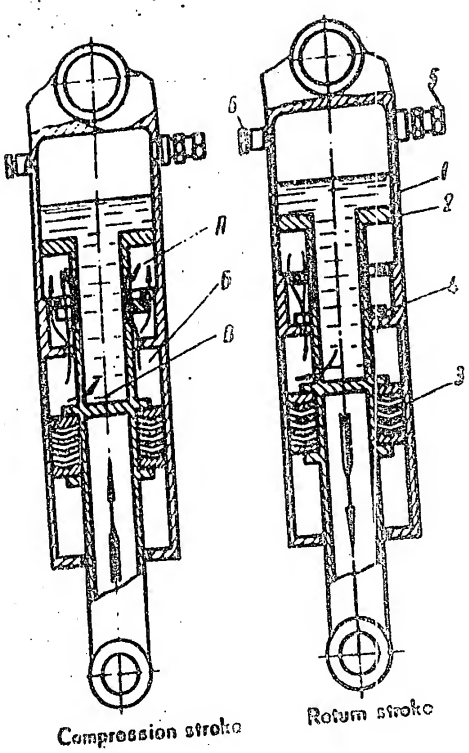

Fig.100. Diagram of Shock Absorber Operation
1 – cylinder; 2 – piston; 3 – packing assembly; 4 – valve split spring ring; 5 – connection for filling with fluid and charging with nitrogen; 6 – connection for draining excessive fluid.

POOR ORIGINAL

Sanitized Copy Approved for Release 2011/02/18 : CIA-RDP82-00038R001700250001-7

Sanitized Copy Approved for Release 2011/02/18 : CIA-RDP82-00038R001700250001-7

SECRET
NO FOREIGN DISSEM

Installation of packing into brake

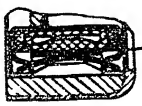

Section АОБВГД

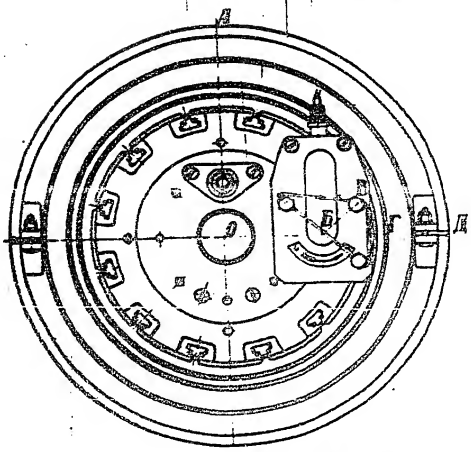

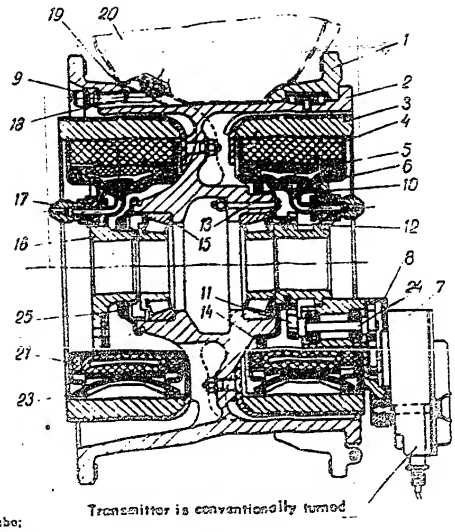

Transmitter is conventionally turned

Fig.101. Wheel KT-38

1 – removable rim halves; 2 – drum; 3 – jacket; 4 – shoe; 5 – tube; 6 – cap; 7 – transmitter УА-24/2 (assembly Dwg A24-200-5); 8 – bracket; 9 – cap; 10 – valve; 11 – driven gear; 12 – gland; 13 – driving gear; 14 – gland; 15 – roller bearing; 16 – body; 17 – connection; 18 – nut; 19 – valve; 20 – tyre; 21 – adjusting ring; 22 – gasket ring; 23 – return spring; 24 – shaft; 25 – gland.

SECRET
NO FOREIGN DISSEM

50X1-HUM

POOR ORIGINAL

Sanitized Copy Approved for Release 2011/02/18 : CIA-RDP82-00038R001700250001-7

Sanitized Copy Approved for Release 2011/02/18 : CIA-RDP82-00038R001700250001-7

50X1-HUM

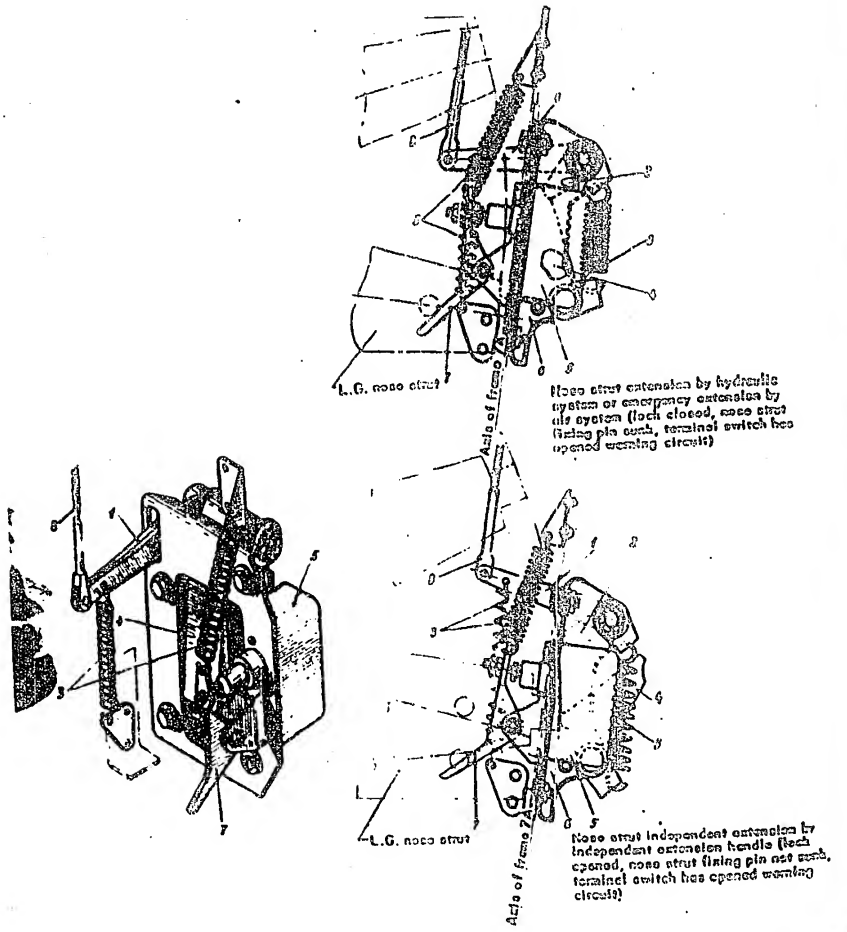

Fig.102. Up-Lock

1 – lever; 2 – cam; 3 – springs; 4 – support lever; 5 – terminal switch BK-2-1432; 6 – bracket; 7 – warning system lever; 8 – cable from independent extension handle.

POOR ORIGINAL

Sanitized Copy Approved for Release 2011/02/18 : CIA-RDP82-00038R001700250001-7

Sanitized Copy Approved for Release 2011/02/18 : CIA-RDP82-00038R001700250001-7

SECRET
NO FOREIGN DISSEM

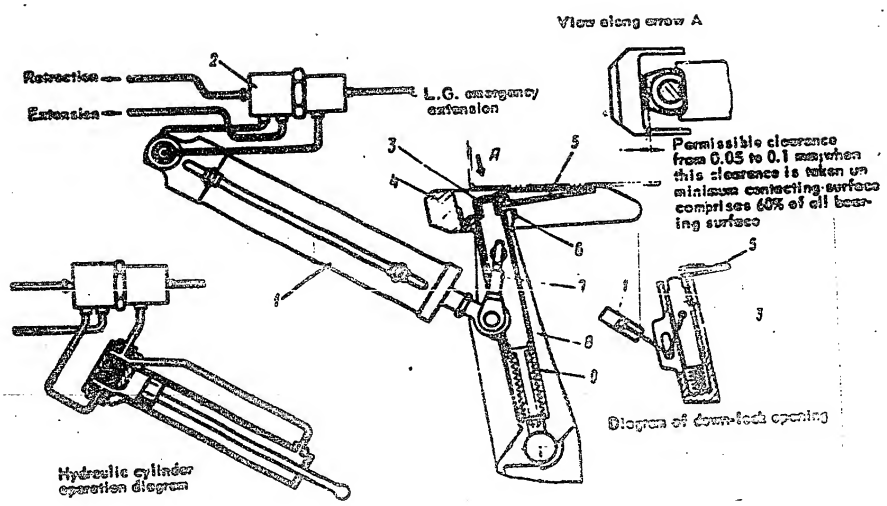

Fig.103. Down-Locks

1 – hydraulic cylinder; 2 – hydraulic lock; 3 – pin of nose strut arm; 4 – front roll; 5 – rear roll; 6 – supporting ring; 7 – link; 8 – nose strut arm; 9 – disc springs.

SECRET
NO FOREIGN DISSEM

50X1-HUM

POOR ORIGINAL

Sanitized Copy Approved for Release 2011/02/18 : CIA-RDP82-00038R001700250001-7

Sanitized Copy Approved for Release 2011/02/18 : CIA-RDP82-00038R001700250001-7

SECRET
NO FOREIGN DISSEM

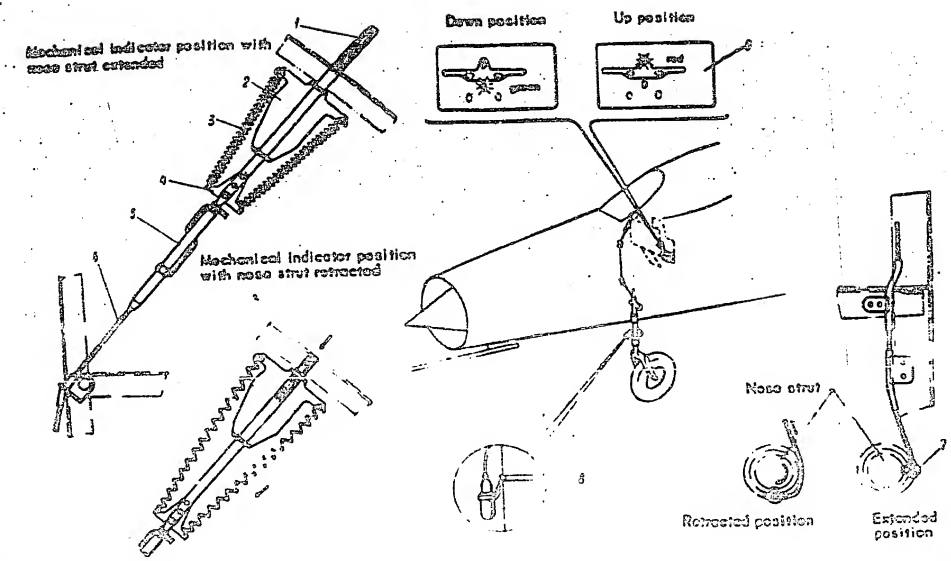

Fig.104. Nose Strut Position Warning System
1 – mechanical indicator – pin; 2 – fixed bracket; 3 – springs; 4 – bracket; 5 – adjusting turnbuckle; 6 – cable; 7 – bolt securing cable to strut; 8 – L.G. position outer indication lamp; 9 – panel ПИС-2.

SECRET
NO FOREIGN DISSEM

50X1-HUM

POOR ORIGINAL

Sanitized Copy Approved for Release 2011/02/18 : CIA-RDP82-00038R001700250001-7

Sanitized Copy Approved for Release 2011/02/18 : CIA-RDP82-00038R001700250001-7

SECRET
NO FOREIGN DISSEM

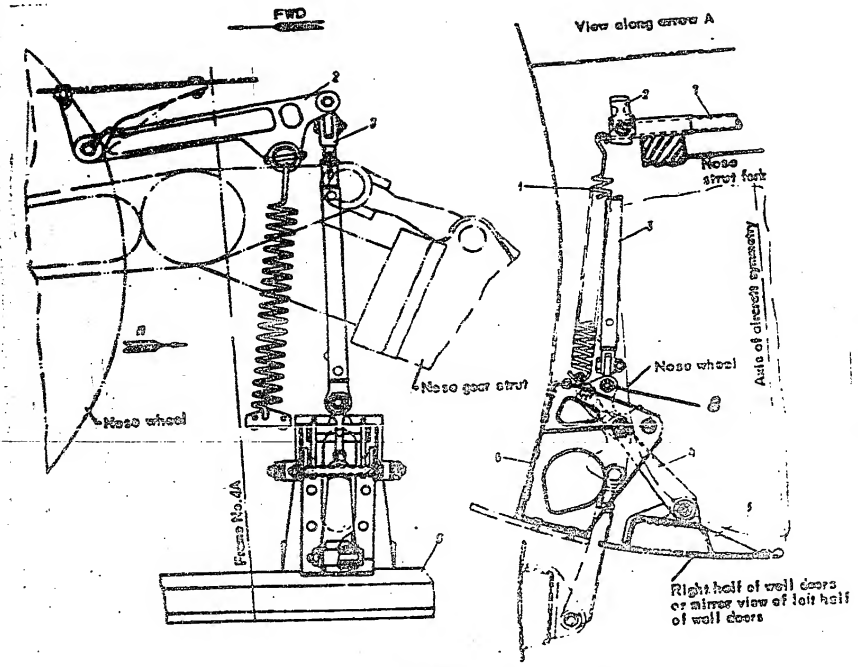

Fig.103. Nose Strut Well Doors

1 – [illegible] 3 – [illegible] 4 – rod ; 5 – well doors 6 – bracket fastening rod to doors 7 – pipe; 8 – link.

SECRET
NO FOREIGN DISSEM

50X1-HUM

POOR ORIGINAL

Sanitized Copy Approved for Release 2011/02/18 : CIA-RDP82-00038R001700250001-7

Sanitized Copy Approved for Release 2011/02/18 : CIA-RDP82-00038R001700250001-7

SECRET
NO FOREIGN DISSEM

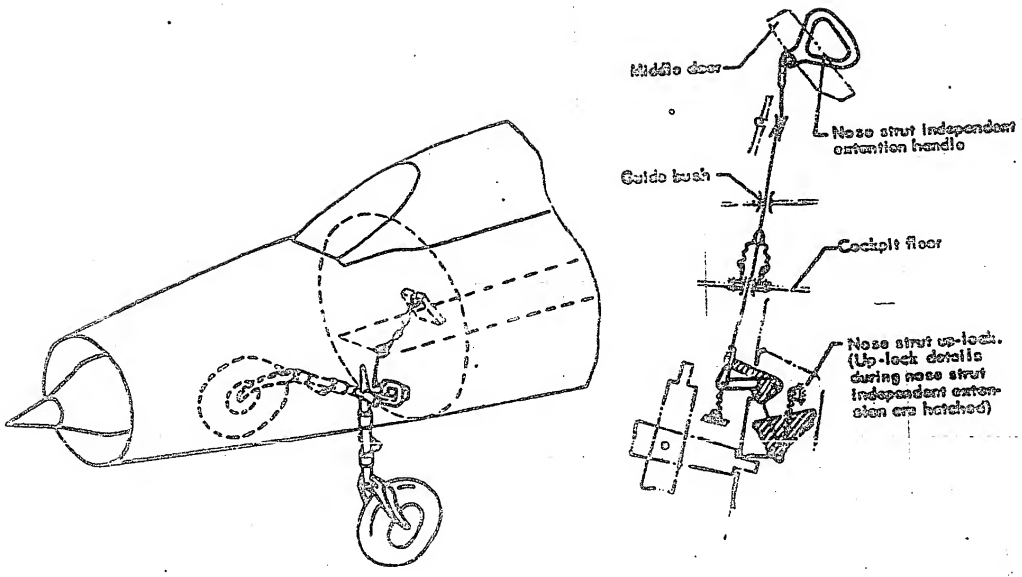

Fig.103. Nose Strut Independent Extension Diagram

50X1-HUM

SECRET
NO FOREIGN DISSEM

POOR ORIGINAL

Sanitized Copy Approved for Release 2011/02/18 : CIA-RDP82-00038R001700250001-7

Sanitized Copy Approved for Release 2011/02/18 : CIA-RDP82-00038R001700250001-7

SECRET
NO FOREIGN DISSEM

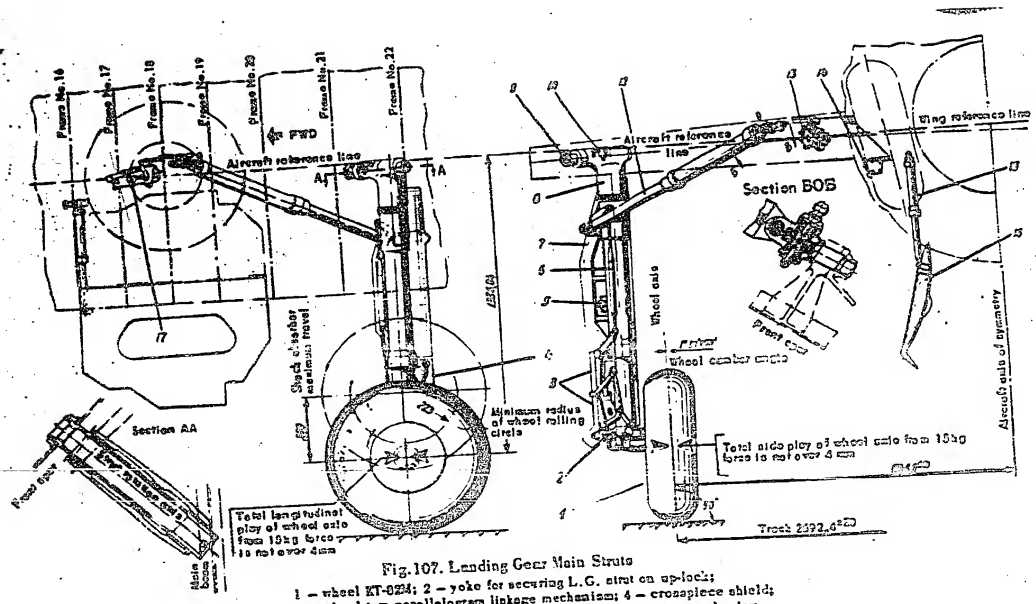

Fig.107. Landing Gear Main Struts

1 – wheel KT-02M; 2 – yoke for securing L.G. strut on up-lock; 3 – wheel turn parallelogram linkage mechanism; 4 – crosspiece shield; 5 – L.G. position outer indicating lamp; 6 – wheel turning mechanism rod; 7 – shield on main strut; 8 – landing gear main strut; 9 – main strut fulcrum; 10 – L.G. down position warning system terminal switch; 11 – indicator; 12 – hydraulic cylinder for strut retraction and extension; 13 – main strut up-lock; 14 – door lock; 15 – door actuating hydraulic cylinder; 16 – wheel door; 17 – L.G. up position warning system terminal switch.

SECRET
NO FOREIGN DISSEM

50X1-HUM

POOR ORIGINAL

Sanitized Copy Approved for Release 2011/02/18 : CIA-RDP82-00038R001700250001-7

Sanitized Copy Approved for Release 2011/02/18 : CIA-RDP82-00038R001700250001-7

50X1-HUM

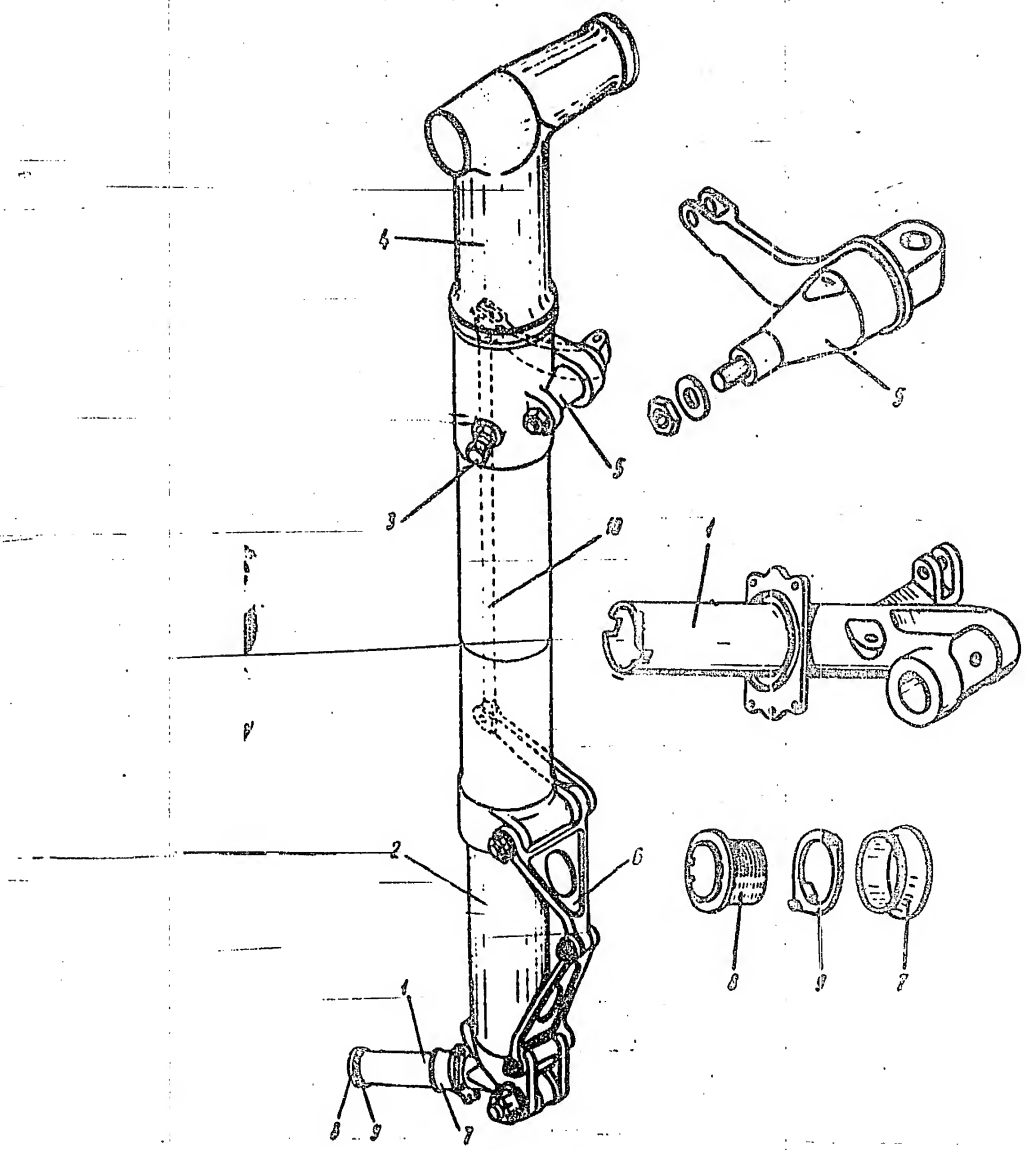

Fig.103. Landing Gear Main Strut Construction

1 – wheel axle shaft; 2 – rod; 3 – charging valve; 4 – sleeve; 5 – bolt with ball-crank; 6 – torque arms; 7 – hub; 8 – nut; 9 – washer; 10 – rod.

POOR ORIGINAL

Sanitized Copy Approved for Release 2011/02/18 : CIA-RDP82-00038R001700250001-7

Sanitized Copy Approved for Release 2011/02/18 : CIA-RDP82-00038R001700250001-7

50X1-HUM

FOR OFFICIAL USE ONLY

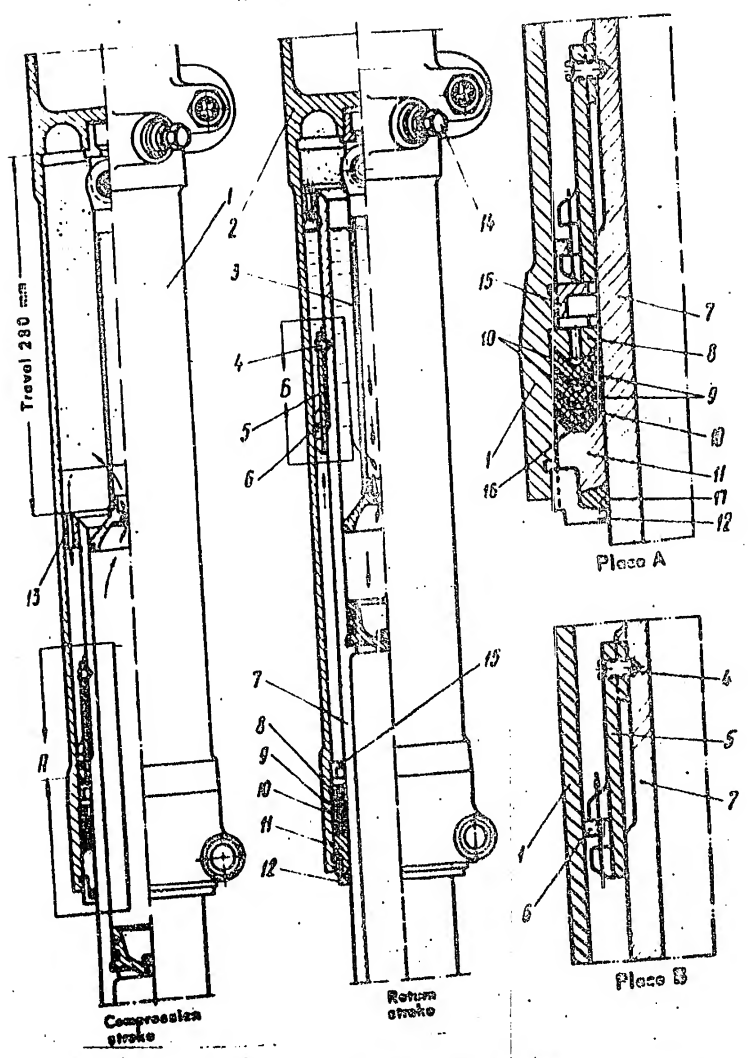

Fig.109. Shock Absorber Operation Diagram

1 – sleeve; 2 – cylinder; 3 – plunger; 4 – screw; 5 – supporting ring; 6 – packing ring; 7 – rod; 8 – upper support ring; 9 – duralumin ring; 10 – rubber cup; 11 – lower bearing; 12 – nut; 13 – upper bearing; 14 – charging connection; 15 – nut; 16 – leather cup; 17 – gland.

Sanitized Copy Approved for Release 2011/02/18 : CIA-RDP82-00038R001700250001-7

Sanitized Copy Approved for Release 2011/02/18 : CIA-RDP82-00038R001700250001-7

SECRET
NO FOREIGN DISSEM

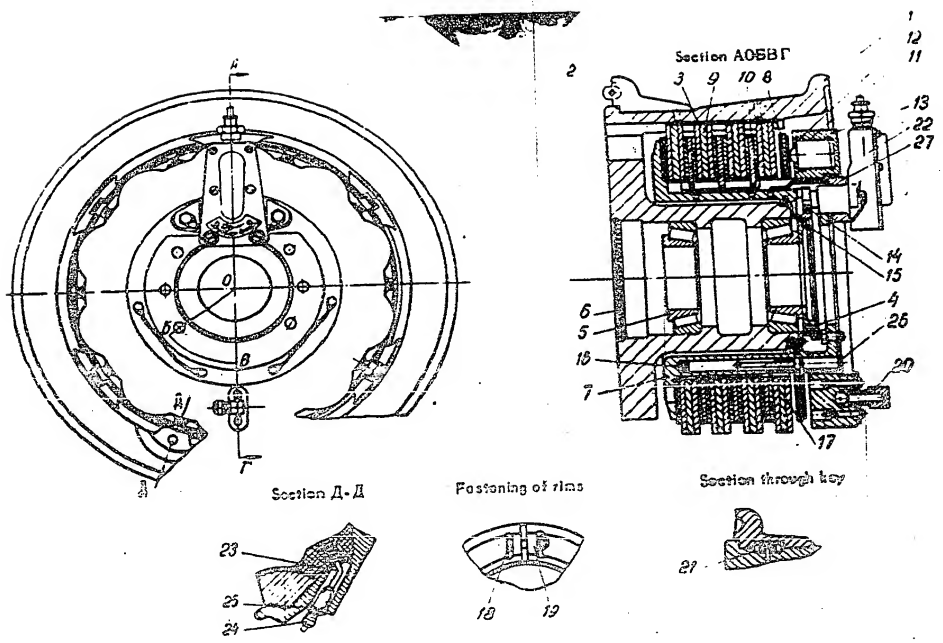

Fig.110. Wheel KT-82M

1 – drum; 2 – rim half; 3 – guide; 4 – gland; 5 – roller bearing; 6 – cover; 7 – body; 8 – pressure disc; 9 – bimetallic disc; 10 – powder-metal disc; 11 – piston; 12 – packing ring; 13 – cylinder block; 14 – gear; 15 – gear; 16 – return spring; 17 – pin; 18 – bolt; 19 – lug; 20 – connection; 21 – key; 22 – transmitter; 23 – valve; 24 – cap; 25 – nut; 26 – shield; 27 – flange.

50X1-HUM

POOR ORIGINAL

Sanitized Copy Approved for Release 2011/02/18 : CIA-RDP82-00038R001700250001-7

Sanitized Copy Approved for Release 2011/02/18 : CIA-RDP82-00038R001700250001-7

SECRET
NO FOREIGN DISSEM

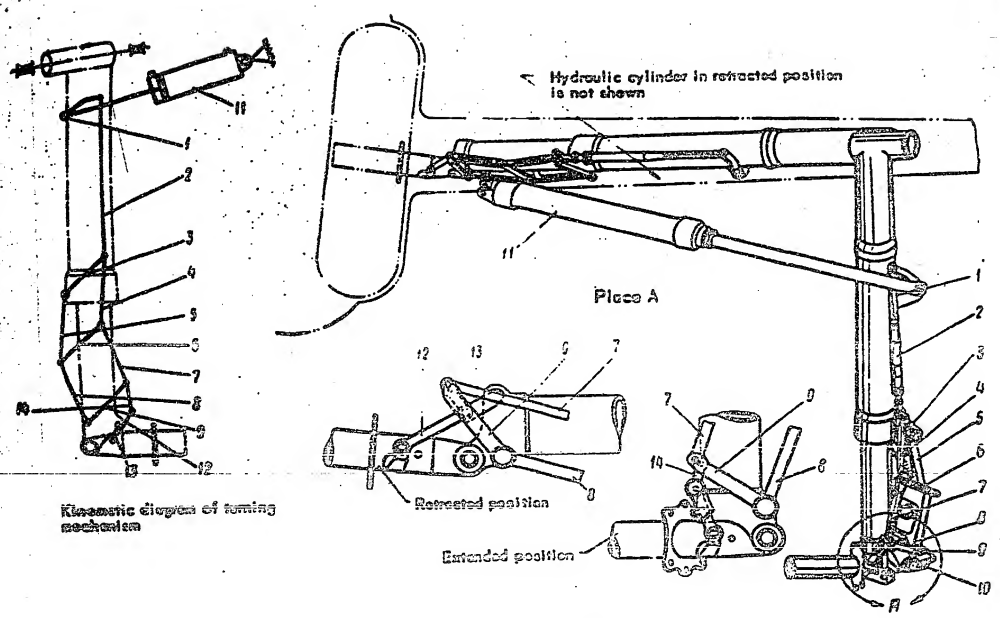

Fig.111.Wheel Turning Mechanism

1 – hinge joint of hydraulic cylinder rod; 2 – rod; 3-bell-crank; 4 – rod; 5 – upper crosspiece; 6 – bell-crank; 7 – rod; 8 – lower crosspiece; 9 – bell-crank; 10 – yoke; 11 – hydraulic cylinder; 12-13 – kinematic lock rods; 14 – link.

50X1-HUM

SECRET
NO FOREIGN DISSEM

POOR ORIGINAL

Sanitized Copy Approved for Release 2011/02/18 : CIA-RDP82-00038R001700250001-7

Sanitized Copy Approved for Release 2011/02/18 : CIA-RDP82-00038R001700250001-7

50X1-HUM

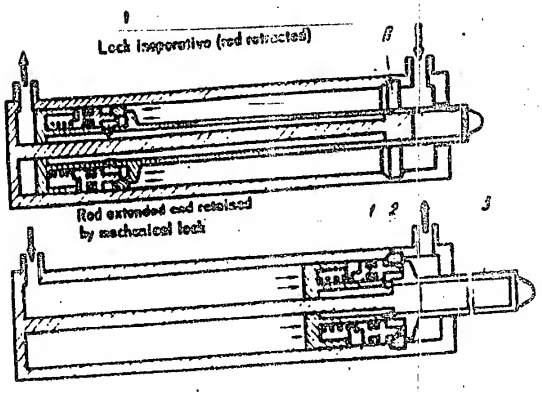

Fig.112. Diagram of Hydraulic Cylinder Lock Operation

1 – lock spring ring; 2 – cylinder; 3 – rod; 4 – lock cam.

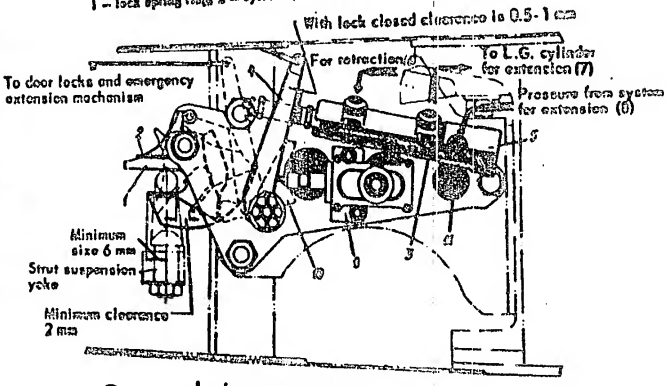

Lock operation diagram

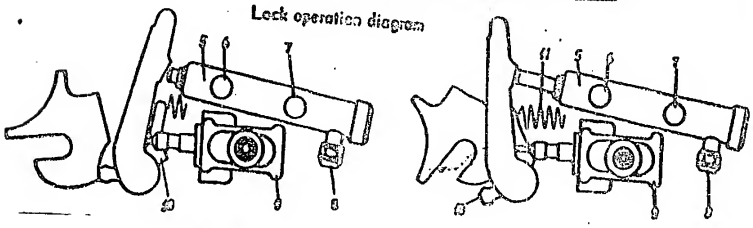

Lock closed

Lock opened

Fig.113. Up-Lock

1 – hook; 2 – hook spring; 3 – lock body; 4 – lever; 5 – lock hydraulic cylinder; 6 – retraction pressure supply connection; 7 – extension pressure supply connection; 8 – extension pressure supply connection; 9 – terminal switch; 10 – cam; 11 – cam spring.

POOR ORIGINAL

Sanitized Copy Approved for Release 2011/02/18 : CIA-RDP82-00038R001700250001-7

Sanitized Copy Approved for Release 2011/02/18 : CIA-RDP82-00038R001700250001-7

50X1-HUM

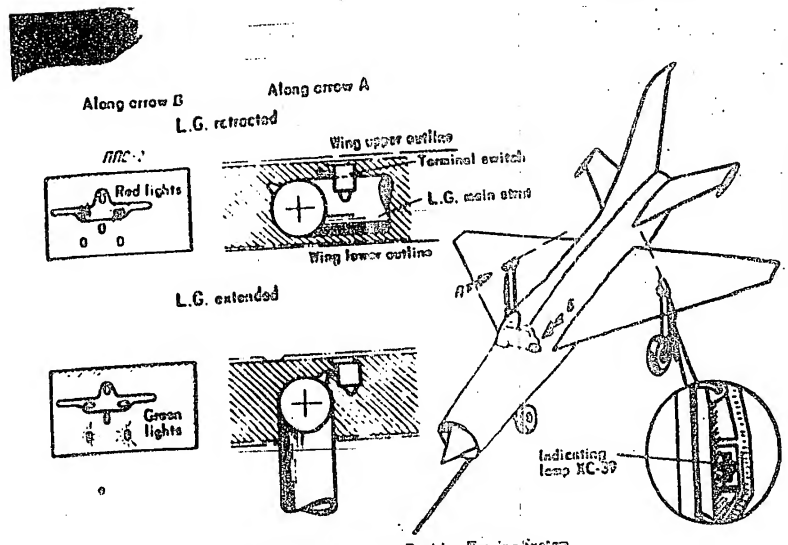

Fig.114. L.G. Main Strut Position Warning System

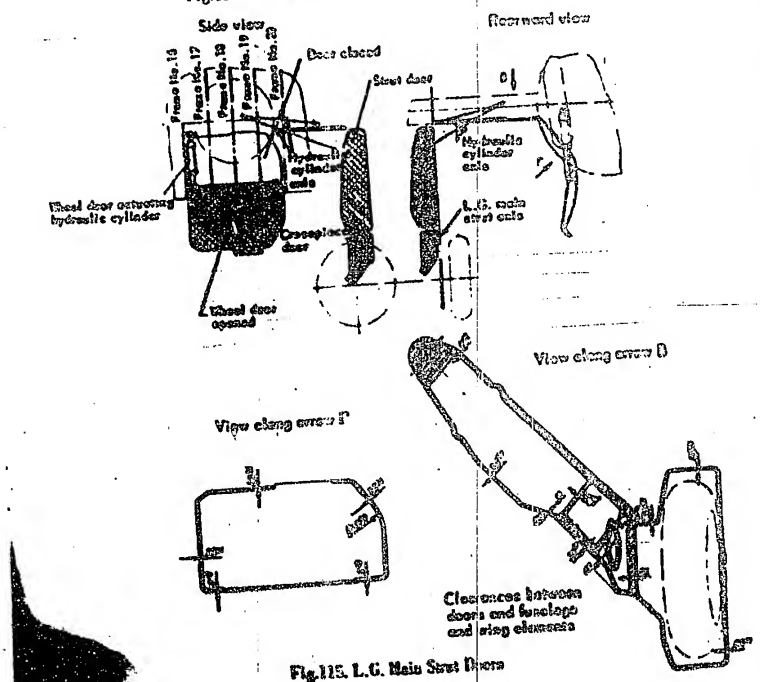

Fig.115. L.G. Main Strut Doors

Sanitized Copy Approved for Release 2011/02/18 : CIA-RDP82-00038R001700250001-7

Sanitized Copy Approved for Release 2011/02/18 : CIA-RDP82-00038R001700250001-7

SECRET
NO FOREIGN DISSEM

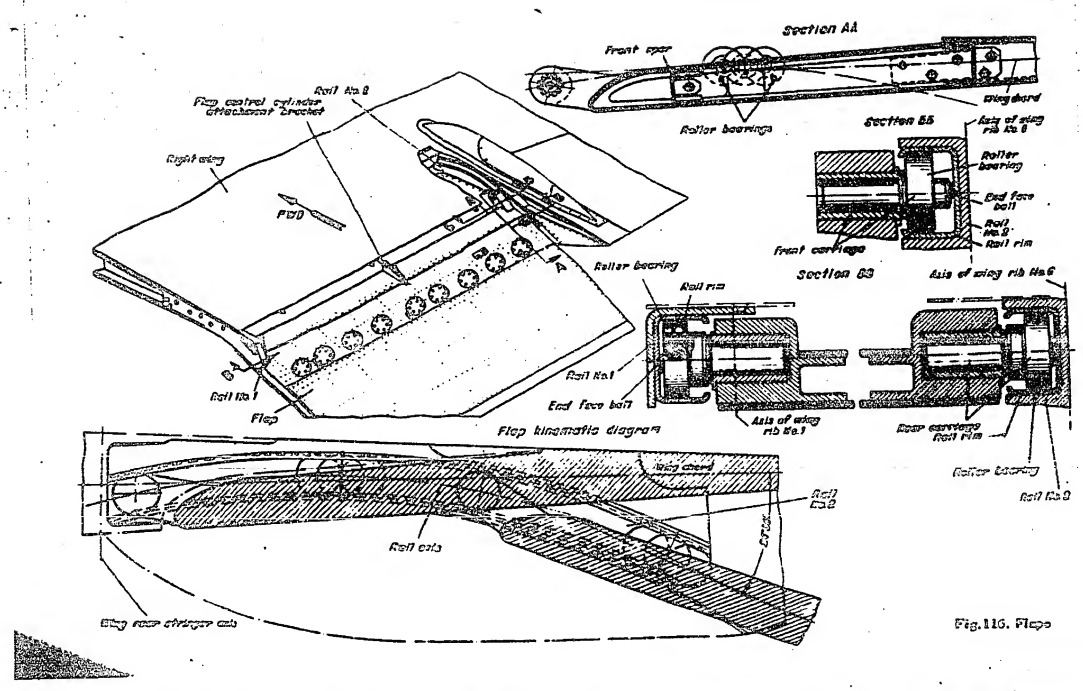

Fig.116. Flaps

50X1-HUM

POOR ORIGINAL

Sanitized Copy Approved for Release 2011/02/18 : CIA-RDP82-00038R001700250001-7

Sanitized Copy Approved for Release 2011/02/18 : CIA-RDP82-00038R001700250001-7

SECRET
NO FOREIGN DISSEM

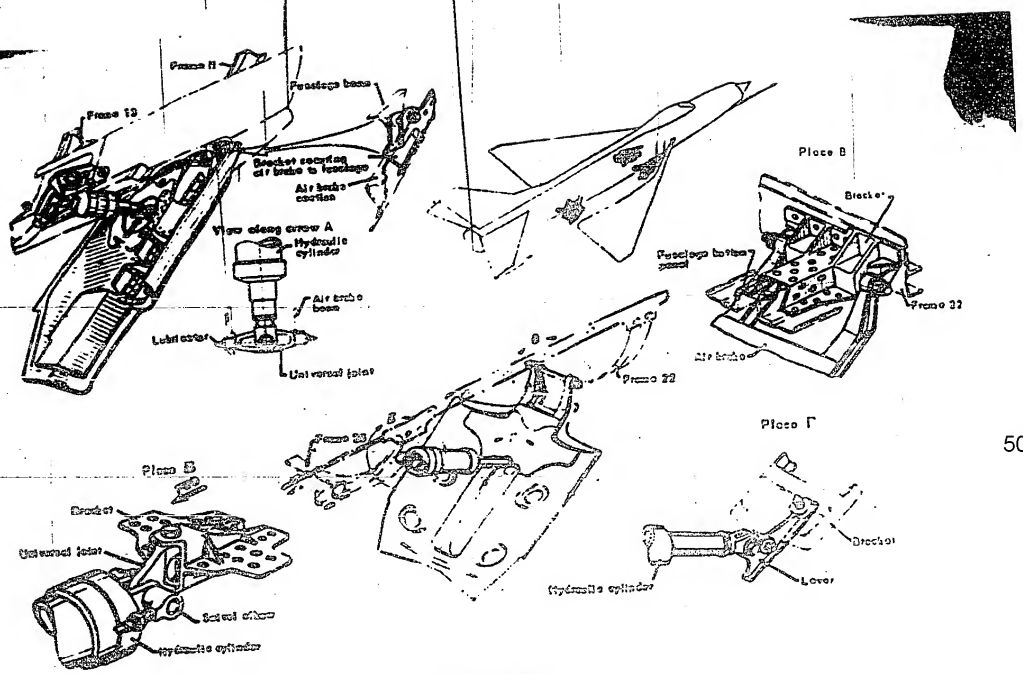

Fig.117. Air Brakes

50X1-HUM

SECRET
NO FOREIGN DISSEM

POOR ORIGINAL

Sanitized Copy Approved for Release 2011/02/18 : CIA-RDP82-00038R001700250001-7

Sanitized Copy Approved for Release 2011/02/18 : CIA-RDP82-00038R001700250001-7

SECRET
NO FOREIGN DISSEM

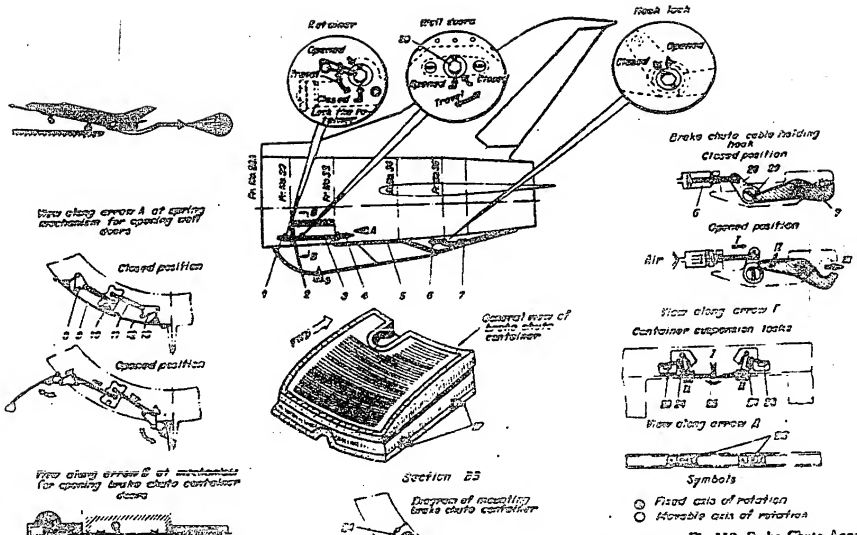

Fig.116. Brake Chute Assembly

1 – front retaining lock; 2 – spring mechanism for opening brake chute container doors; 3 – mechanism for closing well doors; 4 – pneumatic cylinder for opening well doors; 5 – brake chute cable; 6 – pneumatic cylinder for dropping brake chute; 7 – cable holding lock hook; 8,13 – bell-cranks; 9 – upper door; 10,17 – retaining lock rod; 11 – spring mechanism; 12 – lower door; 16 – retaining lock spring; 15 – gear; 16 – pawl; 18 – guide; 19 – rod; 20 – rod of pneumatic cylinder; 21 – spring; 22 – brake chute container; 23 – container suspension lock springs; 24 – hooks; 25 – cable; 26 – bases for container suspension plate; 27 – plate; 28 – bell-crank; 29 – shaft; 30 – door lock.

SECRET
NO FOREIGN DISSEM

50X1-HUM

POOR ORIGINAL

Sanitized Copy Approved for Release 2011/02/18 : CIA-RDP82-00038R001700250001-7

Sanitized Copy Approved for Release 2011/02/18 : CIA-RDP82-00038R001700250001-7

POOR ORIGINAL

50X1-HUM

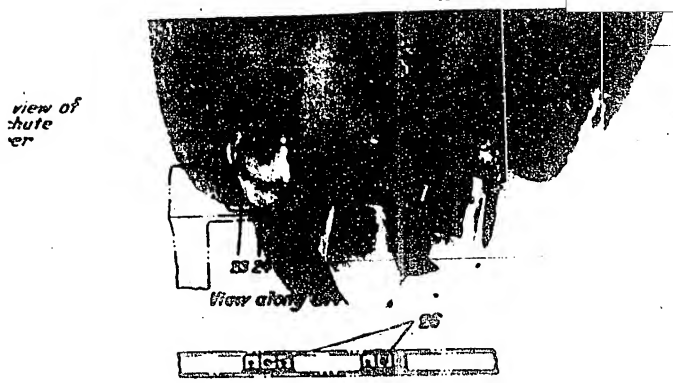

Fig.118. Brake Chute Assembly

1 – front retaining lock; 2 – spring mechanism for opening brake chute container doors; 3 – mechanism for closing well doors; 4 – pneumatic cylinder for opening well doors; 5 – brake chute cable; 6 – pneumatic cylinder for dropping brake chute; 7 – cable holding lock hook; 8,13 – bell-cranks; 9 – upper door; 10,17 – retaining lock rod; 11 – spring mechanism; 12 – lower door; 14 – retaining lock spring; 15 – gear; 16 – pawl; 18 – guide; 19 – rod; 20 – rod of pneumatic cylinder; 21 – spring; 22 – brake chute container; 23 – container suspension lock springs; 24 – hooks; 25 – cable; 26 – boxes for container suspension pins; 27 – pins; 28 – bell-cranks; 29 – shaft; 30 – door lock.

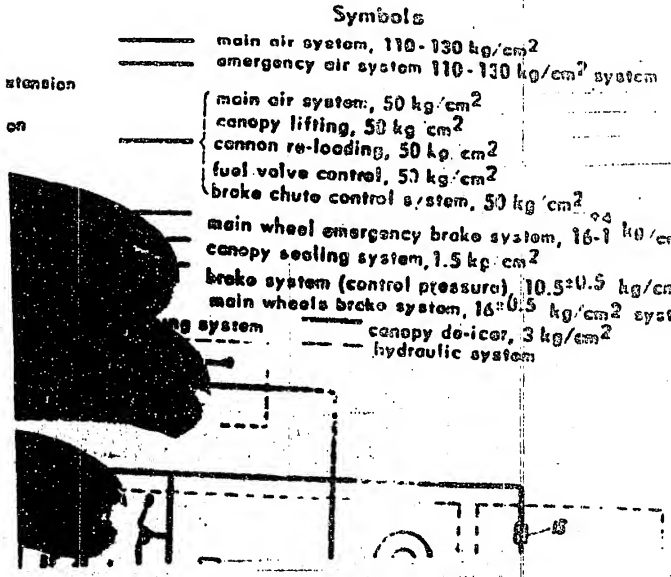

Sanitized Copy Approved for Release 2011/02/18 : CIA-RDP82-00038R001700250001-7

Sanitized Copy Approved for Release 2011/02/18 : CIA-RDP82-00038R001700250001-7

SECRET
NO FOREIGN DISSEM

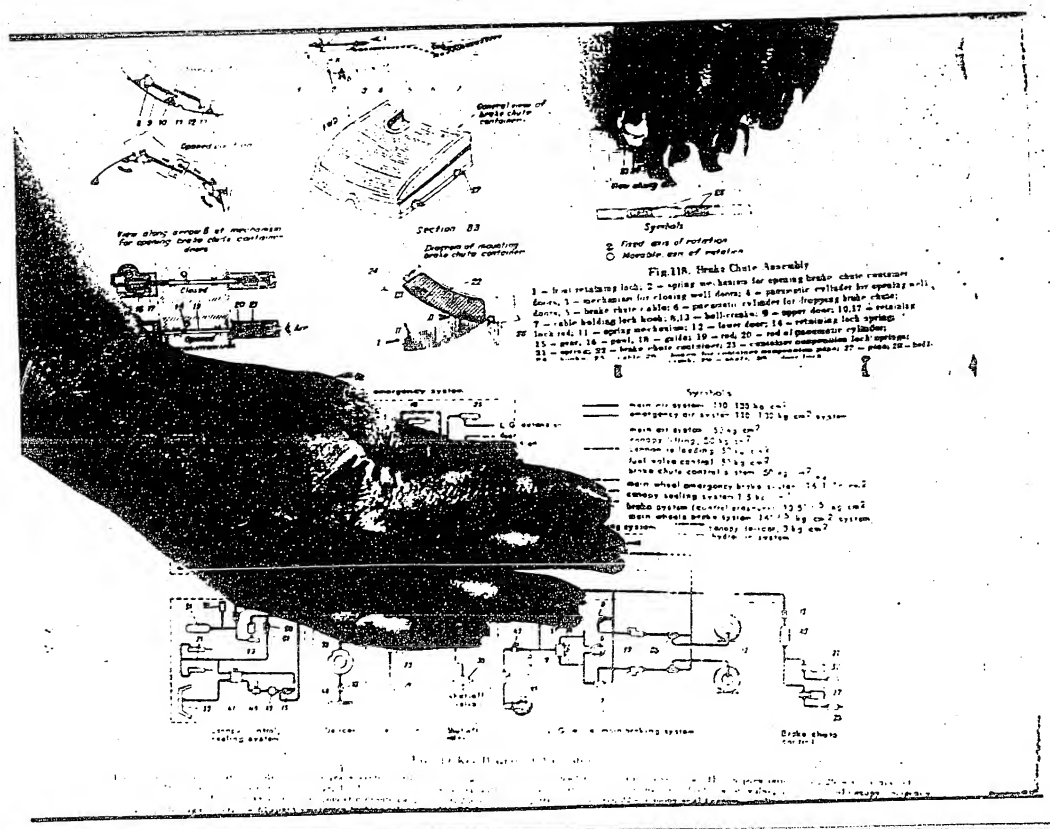

SECRET
NO FOREIGN DISSEM

50X1-HUM

POOR ORIGINAL

Sanitized Copy Approved for Release 2011/02/18 : CIA-RDP82-00038R001700250001-7

Sanitized Copy Approved for Release 2011/02/18 : CIA-RDP82-00038R001700250001-7

SECRET
NO FOREIGN DISSEM

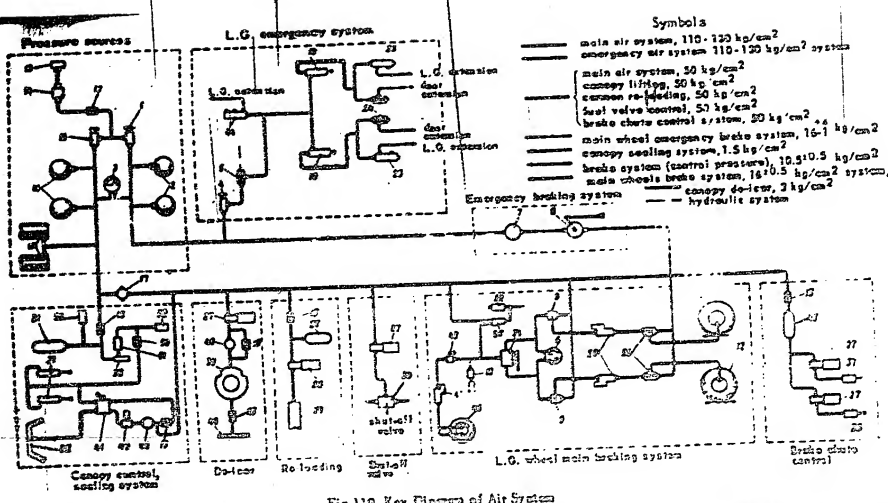

Fig.119. Key Diagram of Air System

1 – emergency system charging valve; 2 – emergency system bottles, 1.3 lit. capacity each; 3 – ДД-150 two-pointer air pressure gauge; 4 – L.G. emergency extension valve; 5 – drain valve; 6 – МВ-12 brake system two-pointer pressure gauge; 7 – 632500 emergency braking reducer; 8 – 623100А emergency braking valve; 9 – УП-24/1 pressure amplifier; 10 – main system bottles, 2 lit. capacity each; 11 – main system bottles, located in main struts, 2 lit. capacity each; 12 – КТ-623А main strut wheels; 13 – aircraft charging connection; 14 – air cushion; 15 – return valve; 16 – main system charging valve; 17 – РВ-50М reducer; 18 – УП-22 switch; 19 – L.G. main strut emergency extension cylinder; 20 – УП-53/1-2 servovalve; 21 – canopy lifting cylinder; 22 – automatic braking cylinder; 23 – main strut hydrolock; 24 – emergency valve; 25 – common reloading bottle; 26 – emergency switches; 27 – 623000М pneumatic valve; 28 – ЭК-13 pneumatic valve; 29 – mechanism of common pneumatic reloading; 30 – fuel shut-off valve; 31 – bottle of canopy emergency jettisoning system; 32 – canopy seal (canopy sealing hose); 33 – emergency valve (diaphragm valve); 34 – ДУ-8 (УП-23) differential valve; 35 – [illegible] (УП-23) reducing valve; 36 – brake chute dropping cylinder; 37 – brake chute door opening cylinder; 38 – cylinder for checking pressure in auxiliary bottle; 39 – [illegible] 40 – РП-3 reducer; 41 – canopy control valve; 42 – РВ-1.6 reducer; 43 – nose strut brake valve; 44 – nose strut hydrolock; 45 – brake chute control system air bottle; 46 – КТ-53 nose strut wheel; 47 – УП-53/1-2 electromagnetic servovalve; 48 – collector; 49 – safety valve; 50 – check valve; 51 – cushion; 52 – cylinder for operating canopy door drive [illegible].

SECRET
NO FOREIGN DISSEM

50X1-HUM

POOR ORIGINAL

Sanitized Copy Approved for Release 2011/02/18 : CIA-RDP82-00038R001700250001-7

Sanitized Copy Approved for Release 2011/02/18 : CIA-RDP82-00038R001700250001-7

SECRET
NO FOREIGN DISSEM

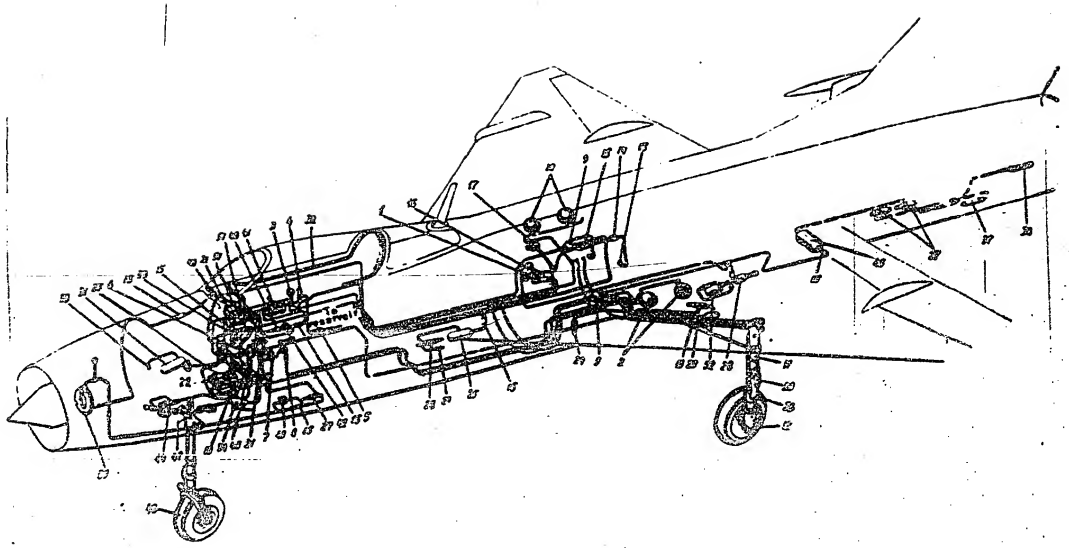

Fig.120. Air System Arrangement Diagram
(For keys to reference numbers see Fig.119)

50X1-HUM

SECRET
NO FOREIGN DISSEM

POOR ORIGINAL

Sanitized Copy Approved for Release 2011/02/18 : CIA-RDP82-00038R001700250001-7

Sanitized Copy Approved for Release 2011/02/18 : CIA-RDP82-00038R001700250001-7

POOR ORIGINAL

50X1-HUM

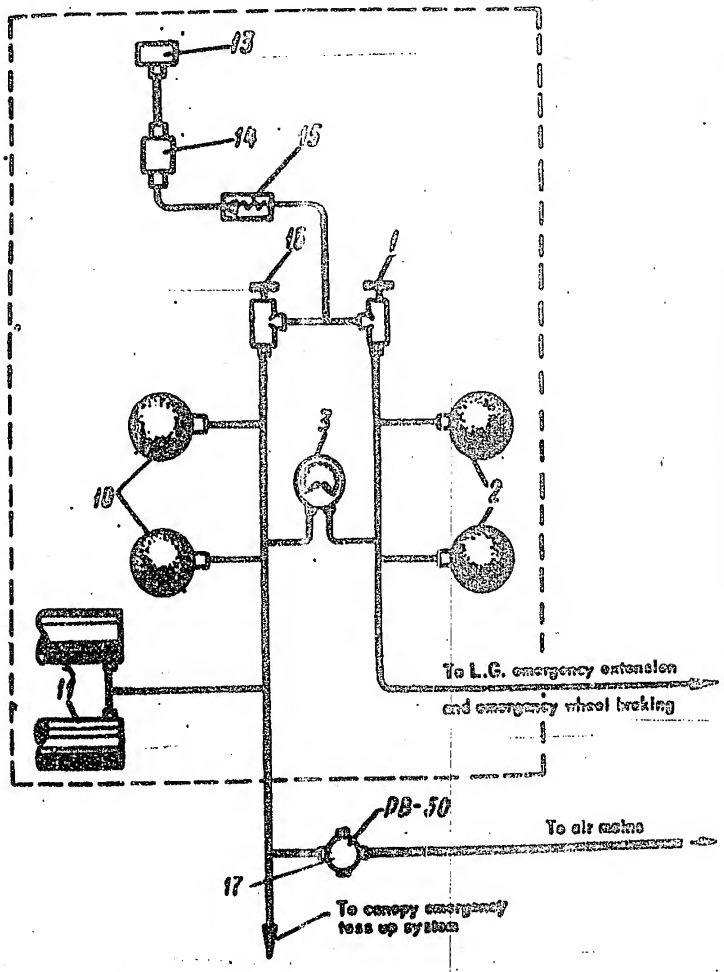

Fig.121. Pressure Sources (For keys to reference numbers see Fig.119)

Sanitized Copy Approved for Release 2011/02/18 : CIA-RDP82-00038R001700250001-7

Sanitized Copy Approved for Release 2011/02/18 : CIA-RDP82-00038R001700250001-7

50X1-HUM

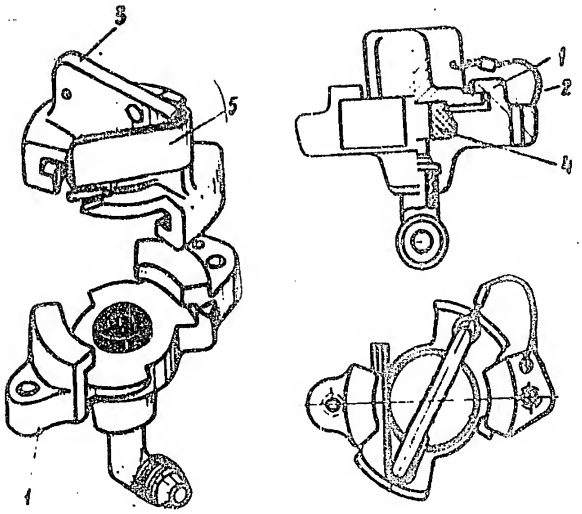

Fig.122. Aircraft Charging Connection
1 – body; 2 – cable; 3 – plug; 4 – rubber gasket; 5 – plate spring.

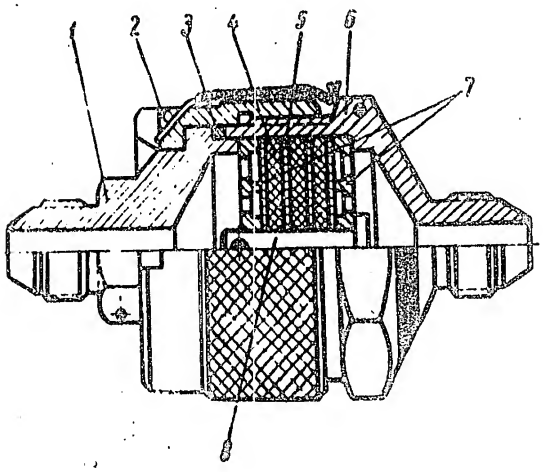

Fig.123. Air Strainer
1 – cover; 2 – union nut; 3 – packing ring; 4 – felt washer; 5 – gauze; 6 – body; 7 – support; 8 – shaft.

POOR ORIGINAL

Sanitized Copy Approved for Release 2011/02/18 : CIA-RDP82-00038R001700250001-7

Sanitized Copy Approved for Release 2011/02/18 : CIA-RDP82-00038R001700250001-7

POOR ORIGINAL

50X1-HUM

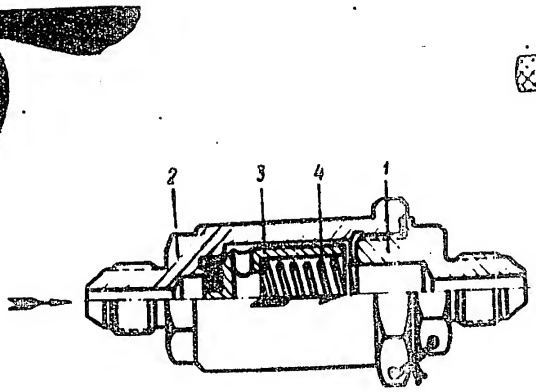

Fig.124. Return Valve
1 – cover; 2 – body; 3 – valve; 4 – retracting spring.

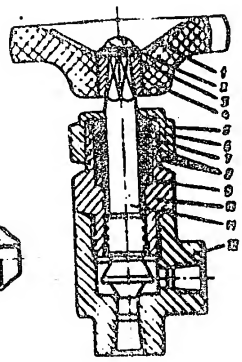

Fig.125. Charging Valve
1 – nameplate; 2 – washer; 3 – screw; 4 – handwheel; 5 – cover; 6 – bush; 7 – plate; 8 – packing rings; 9 – bush; 10 – cover; 11 – shaft; 12 – body.

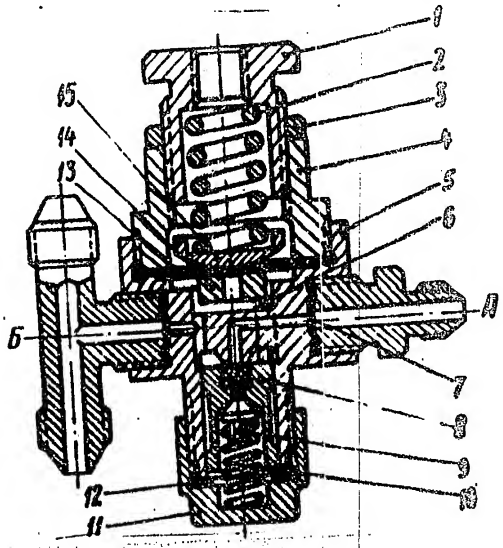

Fig.126. PR-50M Reducer
1 – adjusting cover; 2 – reducing springs; 3 – locknut; 4 – sleeve; 5 – body; 6 – supports; 7 – sealing washers; 8 – inlet valve; 9 – supporting cover; 10 – retracting springs; 11 – cover; 12 – gasket; 13 – diaphragm; 14 – bush; 15 – supporting washer.

Sanitized Copy Approved for Release 2011/02/18 : CIA-RDP82-00038R001700250001-7

Sanitized Copy Approved for Release 2011/02/18 : CIA-RDP82-00038R001700250001-7

50X1-HUM

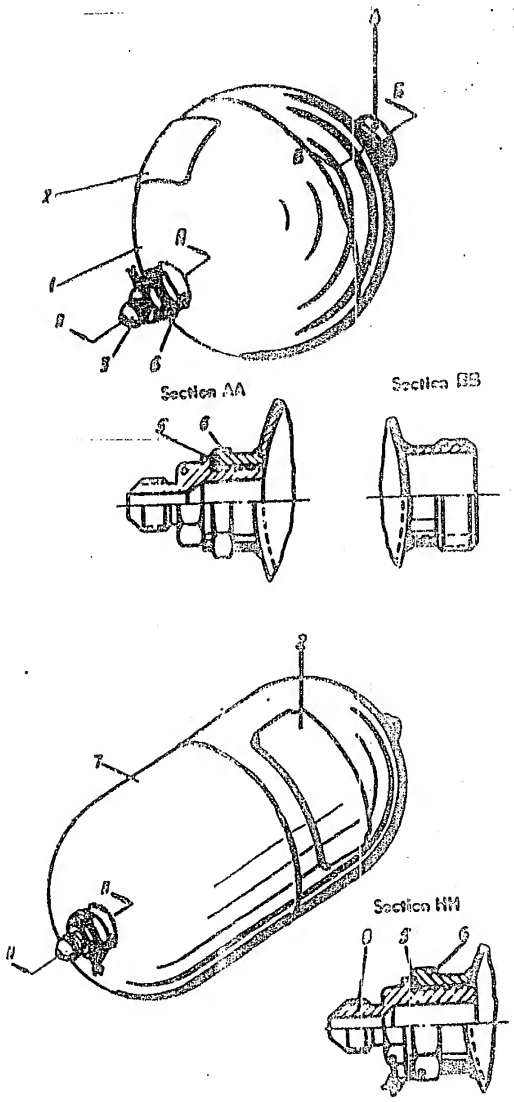

Fig.127. Air Bottles

1 – spherical bottle; 2 – nameplate; 3 – inlet connection; 4 – bush with outer thread; 5 – gasket; 6 – bush with inner thread; 7 – cylindrical bottle; 8 – inlet connection.

FOR OFFICIAL USE

Sanitized Copy Approved for Release 2011/02/18 : CIA-RDP82-00038R001700250001-7

Sanitized Copy Approved for Release 2011/02/18 : CIA-RDP82-00038R001700250001-7

SECRET
NO FOREIGN DISSEM

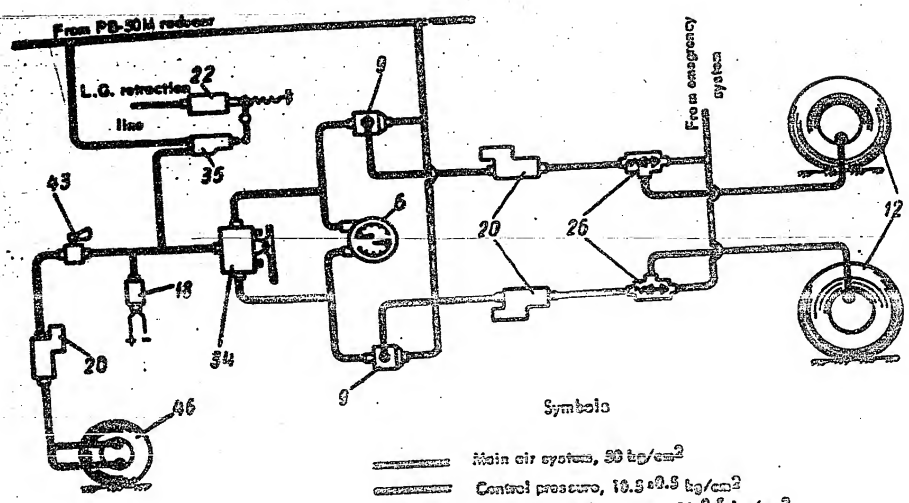

Fig.122. Wheel Brake System (For keys to reference numbers see Fig.119)

50X1-HUM

SECRET
NO FOREIGN DISSEM

POOR ORIGINAL

Sanitized Copy Approved for Release 2011/02/18 : CIA-RDP82-00038R001700250001-7

Sanitized Copy Approved for Release 2011/02/18 : CIA-RDP82-00038R001700250001-7

50X1-HUM

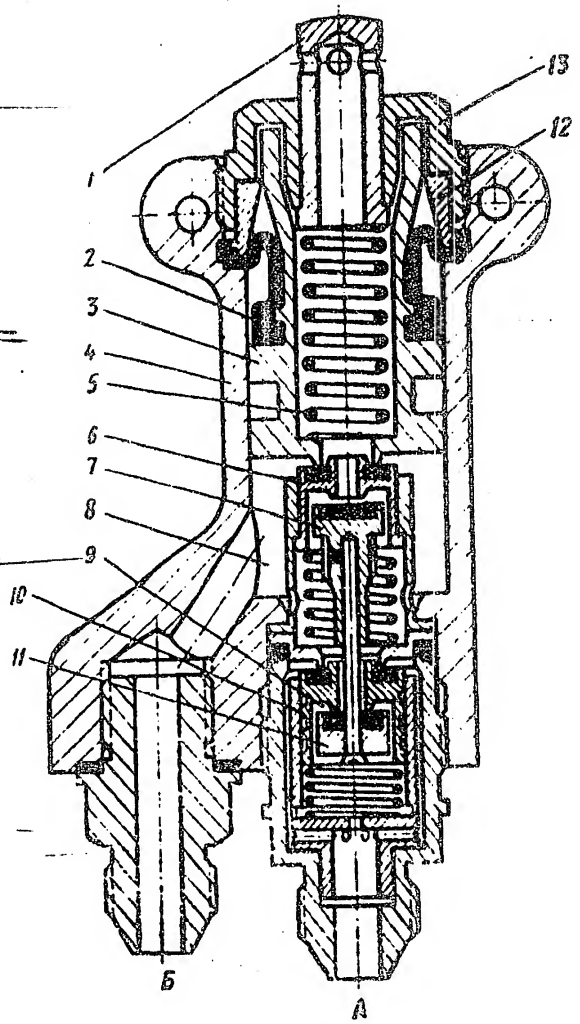

Fig.129. Reducing Valve

1 – tappet; 2 – tubular diaphragm; 3 – piston; 4 – body; 5 – reducing spring; 6 – big outlet valve; 7 – small outlet valve; 8 – middle cavity; 9 – lower cavity; 10 – big inlet valve; 11 – small inlet valve; 12 – bush; 13 – cover.

POOR ORIGINAL

Sanitized Copy Approved for Release 2011/02/18 : CIA-RDP82-00038R001700250001-7

Sanitized Copy Approved for Release 2011/02/18 : CIA-RDP82-00038R001700250001-7

SECRET
NO FOREIGN DISSEM

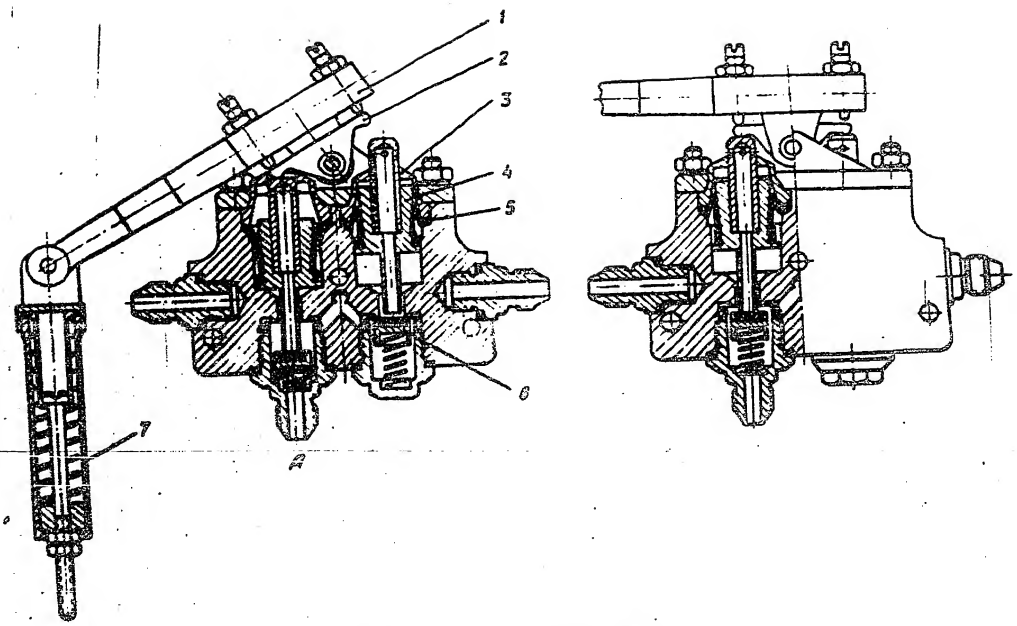

Fig. 130. НЖ-8 (УТ-35) Differential Valve

1 – lever; 2 – rocker arm; 3 – body; 4 – piston; 5 – tubular diaphragm; 6 – valve; 7 – reducing rod.

50X1-HUM

SECRET
NO FOREIGN DISSEM

POOR ORIGINAL

Sanitized Copy Approved for Release 2011/02/18 : CIA-RDP82-00038R001700250001-7

Sanitized Copy Approved for Release 2011/02/18 : CIA-RDP82-00038R001700250001-7

SECRET
NO FOREIGN DISSEM

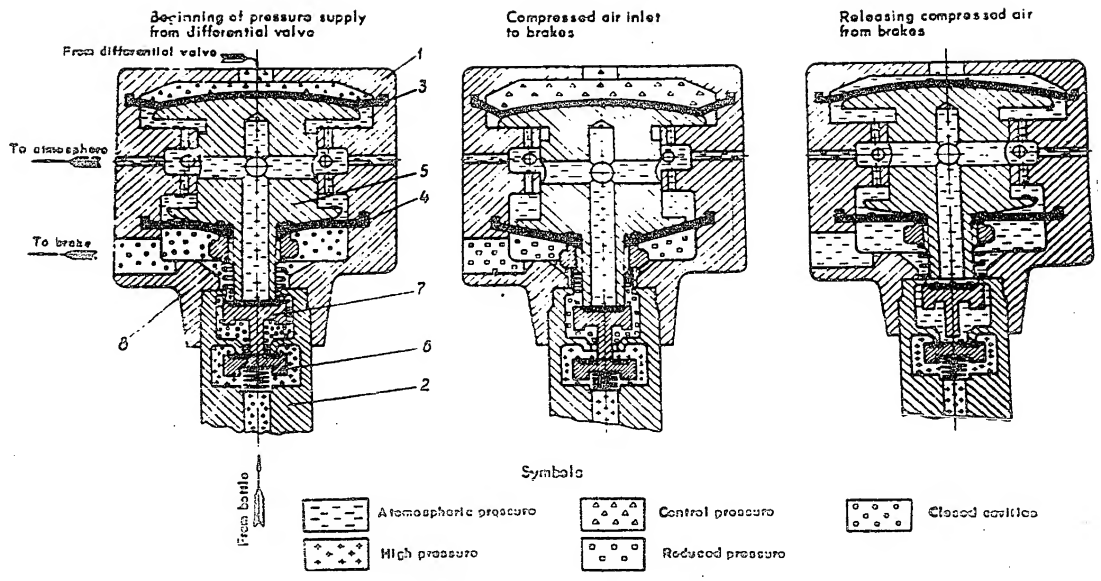

Fig.131. УП-24/1 Pressure Amplifier
1 — body; 2 — guide; 3 — diaphragm; 4 — diaphragm; 5 — piston; 6 — inlet valve; 7 — outlet valve; 8 — spring.

SECRET
NO FOREIGN DISSEM

50X1-HUM

POOR ORIGINAL

Sanitized Copy Approved for Release 2011/02/18 : CIA-RDP82-00038R001700250001-7

Sanitized Copy Approved for Release 2011/02/18 : CIA-RDP82-00038R001700250001-7

POOR ORIGINAL

50X1-HUM

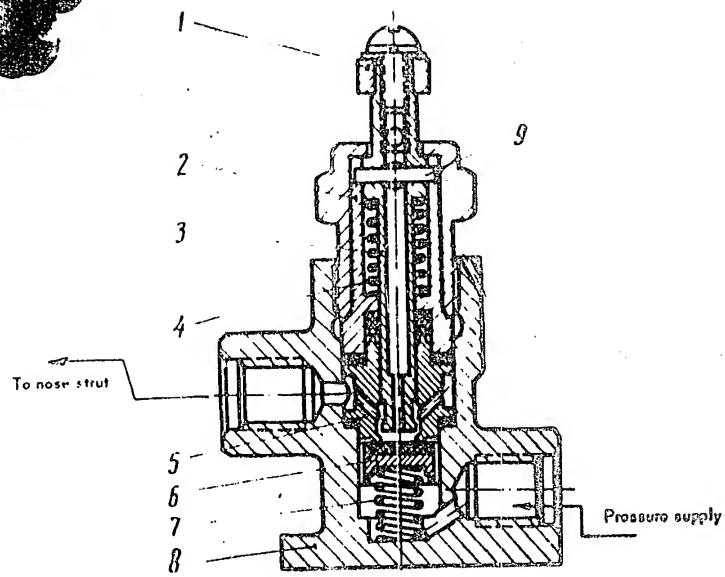

Fig.132. УП - 33/1 Nose Strut Brake Valve
1 – handle; 2 – guide; 3 – rod; 4 – retraction spring; 5 – seat; 6 – valve; 7 – spring; 8 – body; 9 – pin.

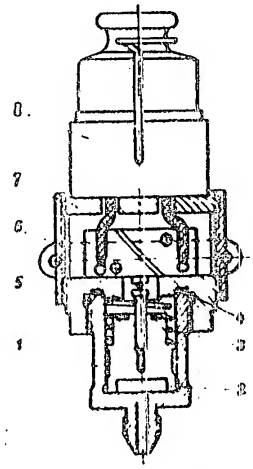

Fig.133. УП-22 Switch
1 – connection; 2 – valve; 3 – spring; 4 – sealing gasket; 5 – body; 6 – limit switch; 7 – bottom; 8 – electric connector.

Sanitized Copy Approved for Release 2011/02/18 : CIA-RDP82-00038R001700250001-7

Sanitized Copy Approved for Release 2011/02/18 : CIA-RDP82-00038R001700250001-7

SECRET
NO FOREIGN DISSEM

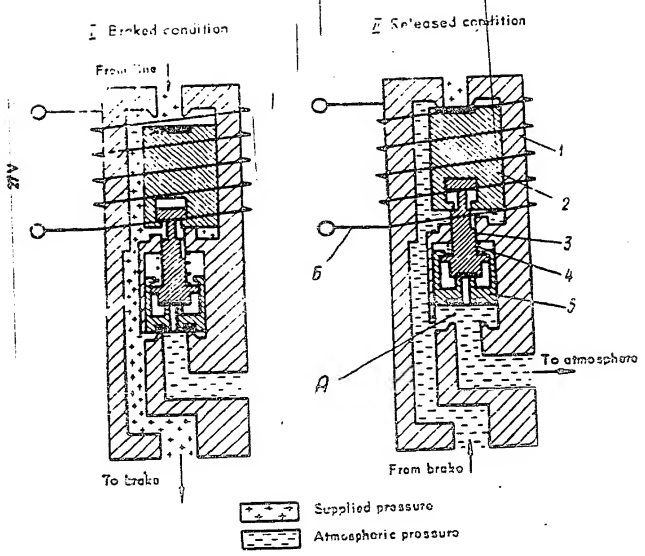

Fig.136. УП-53/1-2 Electromagnetic Servovalve
1 – body; 2 – core; 3 – servovalve; 4 – spring; 5 – valve; 6 – electromagnetic coil.

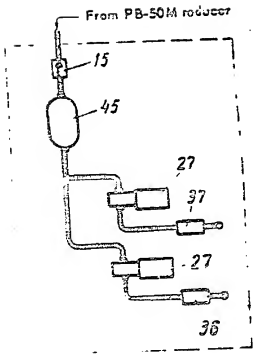

Fig.135. Brake Chute Control System
(For keys to reference numbers see Fig.119)

SECRET
NO FOREIGN DISSEM

50X1-HUM

POOR ORIGINAL

Sanitized Copy Approved for Release 2011/02/18 : CIA-RDP82-00038R001700250001-7

Sanitized Copy Approved for Release 2011/02/18 : CIA-RDP82-00038R001700250001-7

POOR ORIGINAL

50X1-HUM

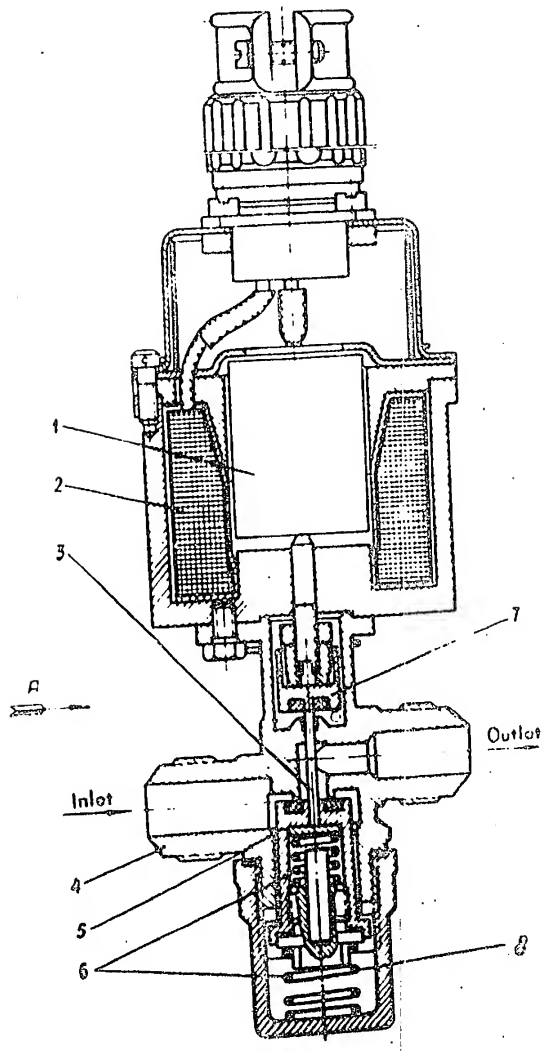

Fig.136. 695000M Electric Pneumatic Valve
1 – core; 2 – electromagnet; 3 – tappet; 4 – body; 5 – inlet valve; 6 – spring; 7 – outlet valve; 8 – spring.

Sanitized Copy Approved for Release 2011/02/18 : CIA-RDP82-00038R001700250001-7

Sanitized Copy Approved for Release 2011/02/18 : CIA-RDP82-00038R001700250001-7

50X1-HUM

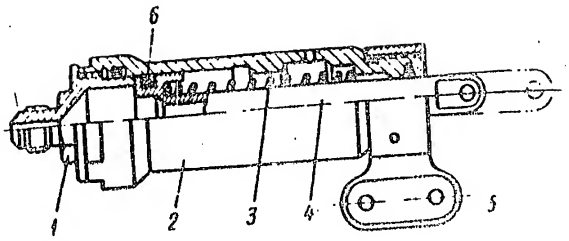

Fig.137. Brake Chute Dropping Cylinder
1 -- cover; 2 -- body; 3 -- retracting spring; 4 -- rod; 5 -- bracket; 6 -- sealing ring.

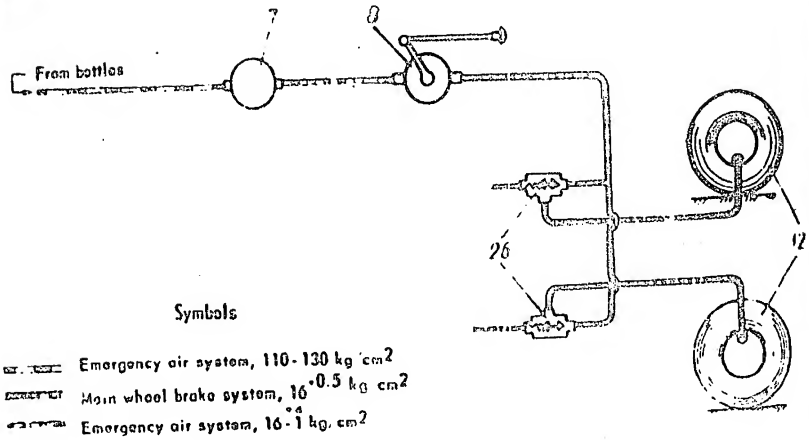

Symbols

Emergency air system, 110-130 kg/cm²
Main wheel brake system, 16±0.5 kg/cm²
Emergency air system, 16±1 kg/cm²

Fig.138. Emergency Braking System (For keys to reference numbers see Fig.119)

POOR ORIGINAL

Sanitized Copy Approved for Release 2011/02/18 : CIA-RDP82-00038R001700250001-7

Sanitized Copy Approved for Release 2011/02/18 : CIA-RDP82-00038R001700250001-7

POOR ORIGINAL

50X1-HUM

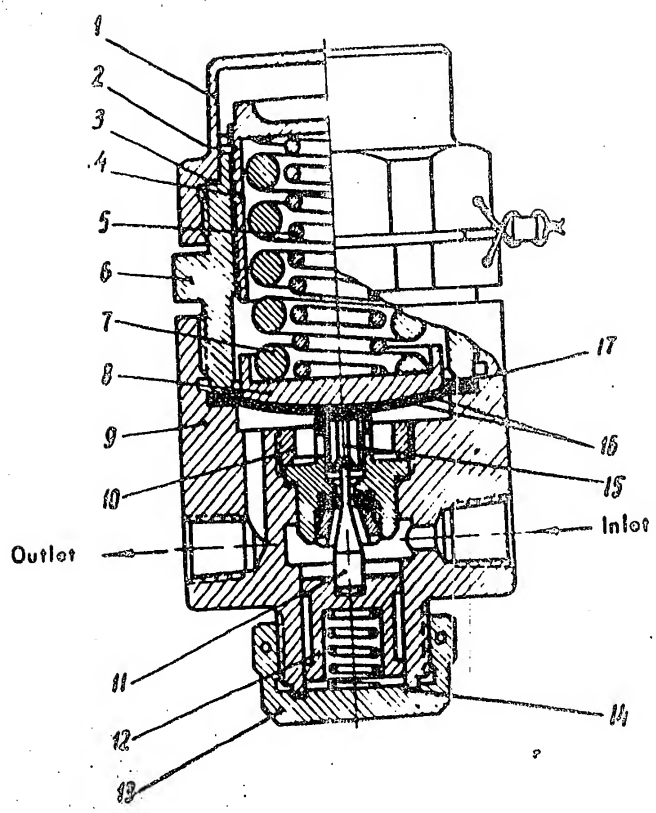

Fig.139. 682500 Reducer

1 – cover; 2 – locking pin; 3 – gasket; 4 – nut; 5 – calibrating spring; 6 – sleeve; 7 – calibrating spring; 8 – support; 9 – body; 10 – nut; 11 – tappet; 12 – piston; 13 – cover; 14 – gasket; 15 – stop; 16 – diaphragm; 17 – ring.

Sanitized Copy Approved for Release 2011/02/18 : CIA-RDP82-00038R001700250001-7

Sanitized Copy Approved for Release 2011/02/18 : CIA-RDP82-00038R001700250001-7

SECRET
NO FOREIGN DISSEM

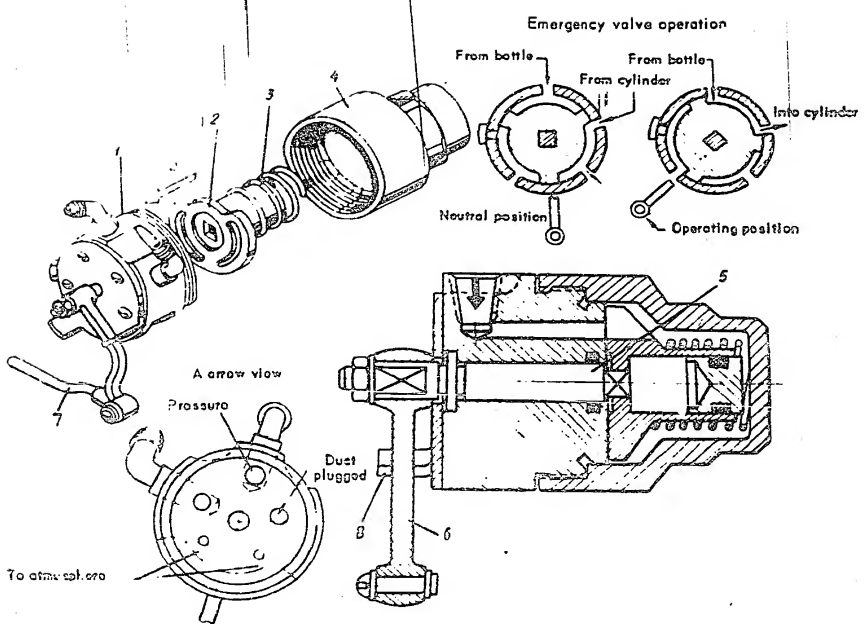

Fig.140. Emergency Braking Valve

1 — body; 2 — slide valve; 3 — spring; 4 — cover; 5 — shaft; 6 — lever; 7 — connecting rod; 8 — washer with stops.

SECRET
NO FOREIGN DISSEM

50X1-HUM

POOR ORIGINAL

Sanitized Copy Approved for Release 2011/02/18 : CIA-RDP82-00038R001700250001-7

Sanitized Copy Approved for Release 2011/02/18 : CIA-RDP82-00038R001700250001-7

POOR ORIGINAL

50X1-HUM

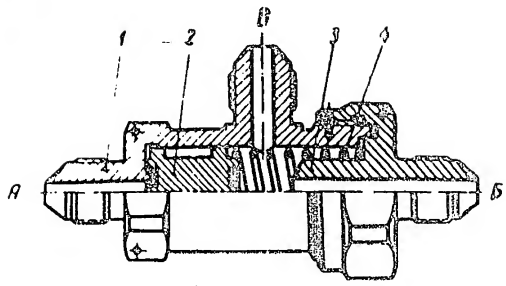

Fig.141. 563600 Emergency Switch
1 – body; 2 – shuttle lock; 3 – connection; 4 – spring.

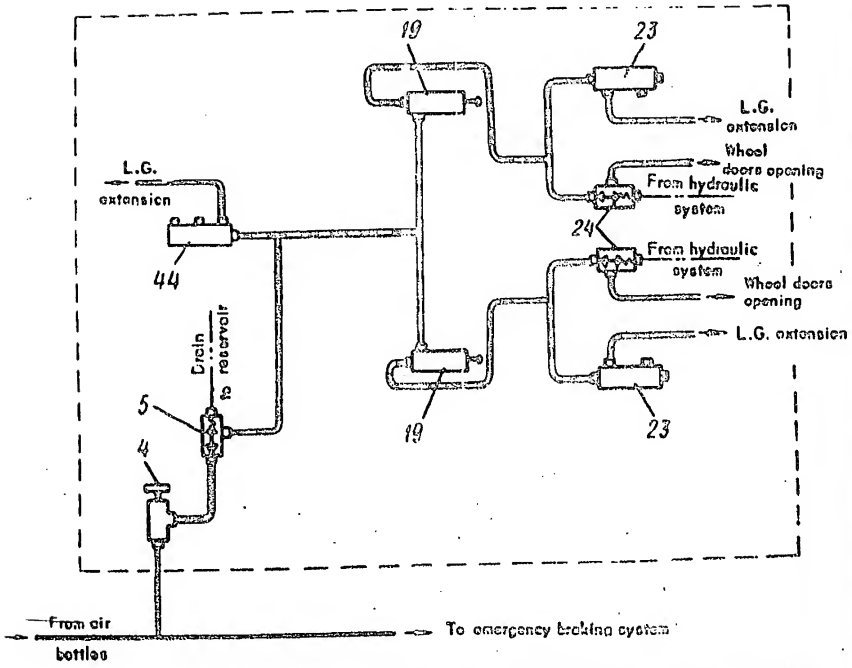

Fig.142. L.G. Emergency Extension System (For keys to ref. numbers see Fig.119)

Sanitized Copy Approved for Release 2011/02/18 : CIA-RDP82-00038R001700250001-7

Sanitized Copy Approved for Release 2011/02/18 : CIA-RDP82-00038R001700250001-7

50X1-HUM

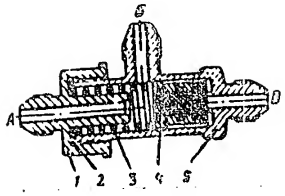

Fig.143. Drain Valve
1 – cover; 2 – gasket; 3 – spring; 4 – valve; 5 – body.

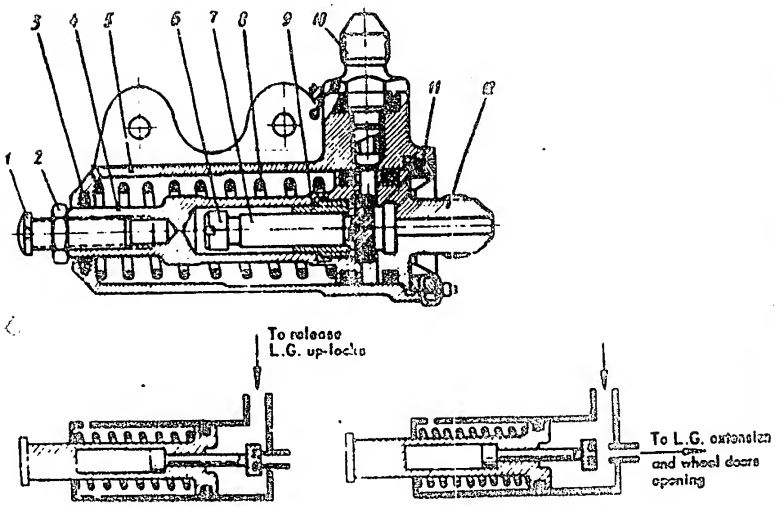

Fig.144. L.G. Main Struts Emergency Extension Cylinder
1 – adjusting bolt; 2 – locknut; 3 – packing gland; 4 – rod; 5 – body; 6 – limiting bush; 7 – valve; 8 – retraction spring; 9 – nut; 10 – connection; 11 – nut; 12 – cover.

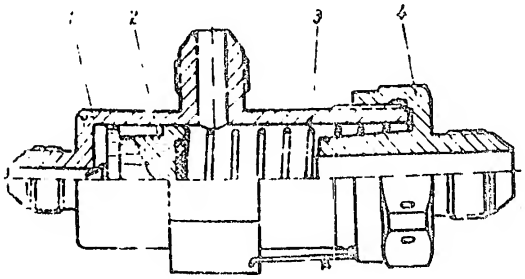

Fig.145. Emergency Valve
1 – body, 2 – piston; 3 – spring, 4 – cover.

POOR ORIGINAL

Sanitized Copy Approved for Release 2011/02/18 : CIA-RDP82-00038R001700250001-7

Sanitized Copy Approved for Release 2011/02/18 : CIA-RDP82-00038R001700250001-7

POOR ORIGINAL

50X1-HUM

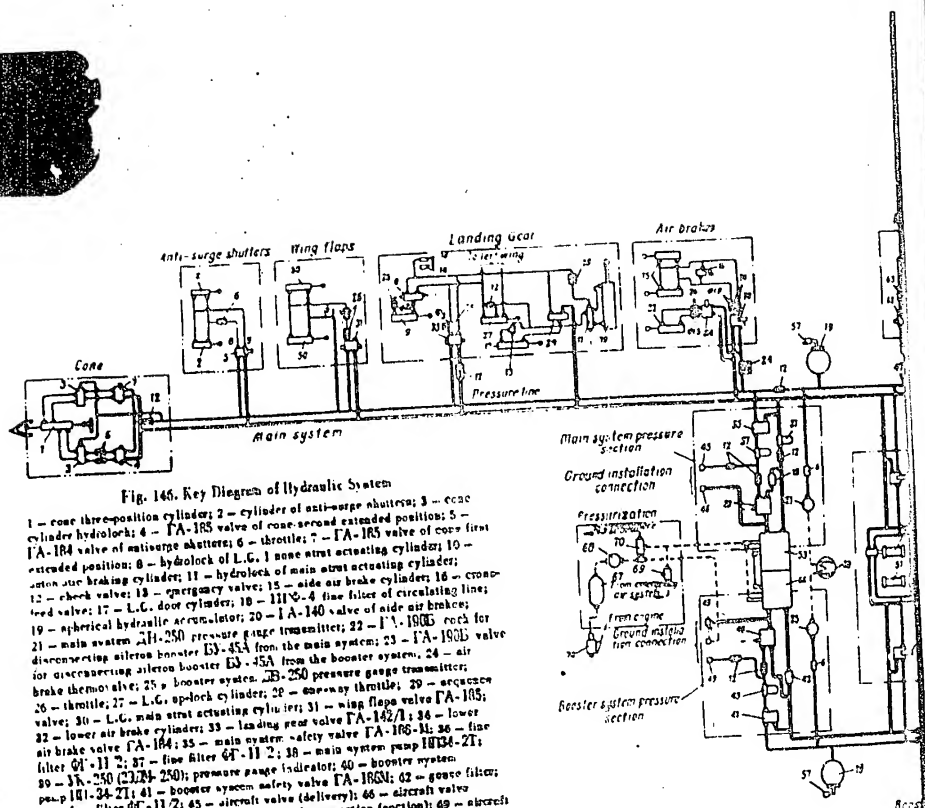

Fig. 146. Key Diagram of Hydraulic System

1 – cone three-position cylinder; 2 – cylinder of anti-surge shutters; 3 – cone cylinder hydrolock; 4 – ГА-185 valve of cone second extended position; 5 – ГА-184 valve of anti-surge shutters; 6 – throttle; 7 – ГА-185 valve of cone first extended position; 8 – hydrolock of L.G. 1 nose strut actuating cylinder; 9 – action air braking cylinder; 11 – hydrolock of main strut actuating cylinder; 12 – check valve; 13 – emergency valve; 15 – side air brake cylinder; 16 – cross-feed valve; 17 – L.G. door cylinder; 18 – ПНФ-4 fine filter of circulating line; 19 – spherical hydraulic accumulator; 20 – ГА-140 valve of side air brakes; 21 – main system ДИ-250 pressure gauge transmitter; 22 – ГА-190Б cock for disconnecting aileron booster БУ-45А from the main system; 23 – ГА-190Б valve for disconnecting aileron booster БУ-45А from the booster system; 24 – air brake thermo valve; 25 – booster system ДИ-250 pressure gauge transmitter; 26 – throttle; 27 – L.G. up-lock cylinder; 28 – one-way throttle; 29 – sequence valve; 30 – L.G. main strut actuating cylinder; 31 – wing flaps valve ГА-185; 32 – lower air brake cylinders; 33 – landing gear valve ГА-142/1; 34 – lower air brake valve ГА-184; 35 – main system safety valve ГА-186-М; 36 – fine filter ФГ-11 2; 37 – fine filter ФГ-11 2; 38 – main system pump НП34-2Т; 39 – ИК-250 (ДИ-250); pressure gauge indicator; 40 – booster system pump НП-34-2Т; 41 – booster system safety valve ГА-186М; 42 – gauge filter; 43 – fine filter ФГ-11/2; 45 – aircraft valve (delivery); 46 – aircraft valve (suction); 47 – disconnect valve; 48 – aircraft connection (suction); 49 – aircraft connection (delivery); 50 – wing flaps cylinder; 51 – БУ-45А aileron booster (left wing); 52 – БУ-45А aileron booster (right wing); 53 – main system compartment in hydraulic reservoir; 54 – main system cylindrical hydraulic accumulator; 55 – main system pressure-sensitive relay ГА-135Т*; 56 – booster system pressure-sensitive relay ГА-135Т*; 57 – charging valve 800500А; 58 – fine filter НПФ-4; 59 – emergency pump unit НП-27Т; 60 – stabilizer booster БУ-51МС; 61 – ГА-190Б valve for disconnecting stabilizer booster from booster system; 62 – afterburner flaps control valve ГА-164М; 63 – ГА-173 motoring valve; 64 – cylindrical accumulator pressure gauge МД-250; 65 – booster system cylindrical hydraulic accumulator; 66 – booster system compartment in hydraulic reservoir; 67 – pressurization unit; 68 – РД-1,5 reducer; 69 – drain valve; 70 – pressurization valve; 71 – tank pressurization aircraft connection; 72 – afterburner flaps tina cylinders; 73 – synchronizing valves; 74 – pump.

* Note: ГА-135Т relay replaces ГА-135/22 relay.

Sanitized Copy Approved for Release 2011/02/18 : CIA-RDP82-00038R001700250001-7

Sanitized Copy Approved for Release 2011/02/18 : CIA-RDP82-00038R001700250001-7

SECRET
NO FOREIGN DISSEM

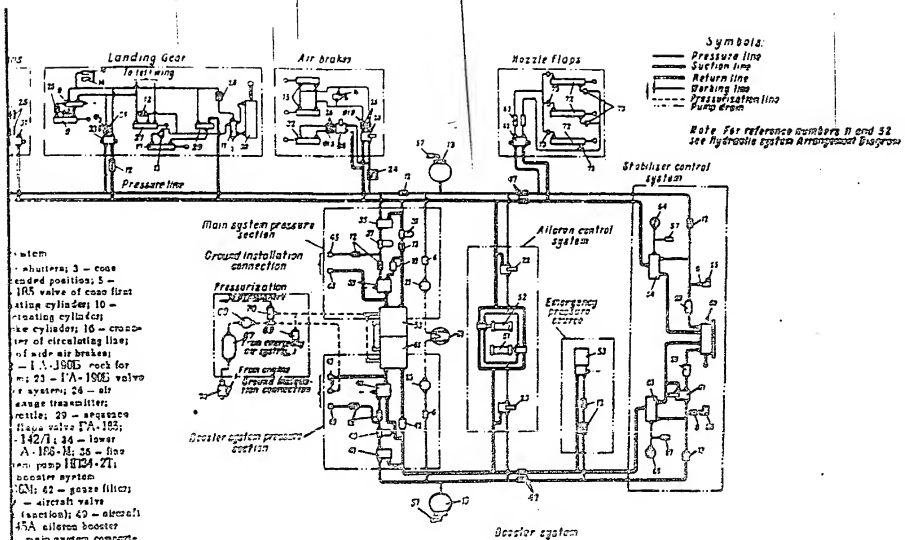

system
shutters; 3 — cone
tended position; 5 —
105 valve of cone first
ating cylinder; 10 —
circuating cylinder;
ke cylinder; 16 — crank
ter of circulating line;
of wide air brakes;
— 1 A-190Б rock for
m; 23 — ГА-190Б valve
r system; 24 — air
gauge transmitter;
rottle; 29 — sequence
Hand valve ГА-183;
-142/1; 34 — lower
A-168-Н; 35 — fine
pump НН24-27;
booster system
CM; 42 — gauge filter;
— aircraft valve
(junction); 49 — aircraft
45A aileron booster
— main system compart-
hydraulic accumulator;
— booster system
00600A; 53 — fine
tabilizer booster
er booster from
-63Н; 61 — ГА-173 metering
; 63 — booster system
pertment in hydraulic
— drain valve; 70 —
nection; 72 — afterburner

SECRET
NO FOREIGN DISSEM

50X1-HUM

POOR ORIGINAL

Sanitized Copy Approved for Release 2011/02/18 : CIA-RDP82-00038R001700250001-7

Sanitized Copy Approved for Release 2011/02/18 : CIA-RDP82-00038R001700250001-7

Fig. 167. Hydraulic System Arrangement Diagram (For keys to reference numbers see Fig. 165)

SECRET
NO FOREIGN DISSEM

50X1-HUM

POOR ORIGINAL

Sanitized Copy Approved for Release 2011/02/18 : CIA-RDP82-00038R001700250001-7

Sanitized Copy Approved for Release 2011/02/18 : CIA-RDP82-00038R001700250001-7

SECRET
NO FOREIGN DISSEM

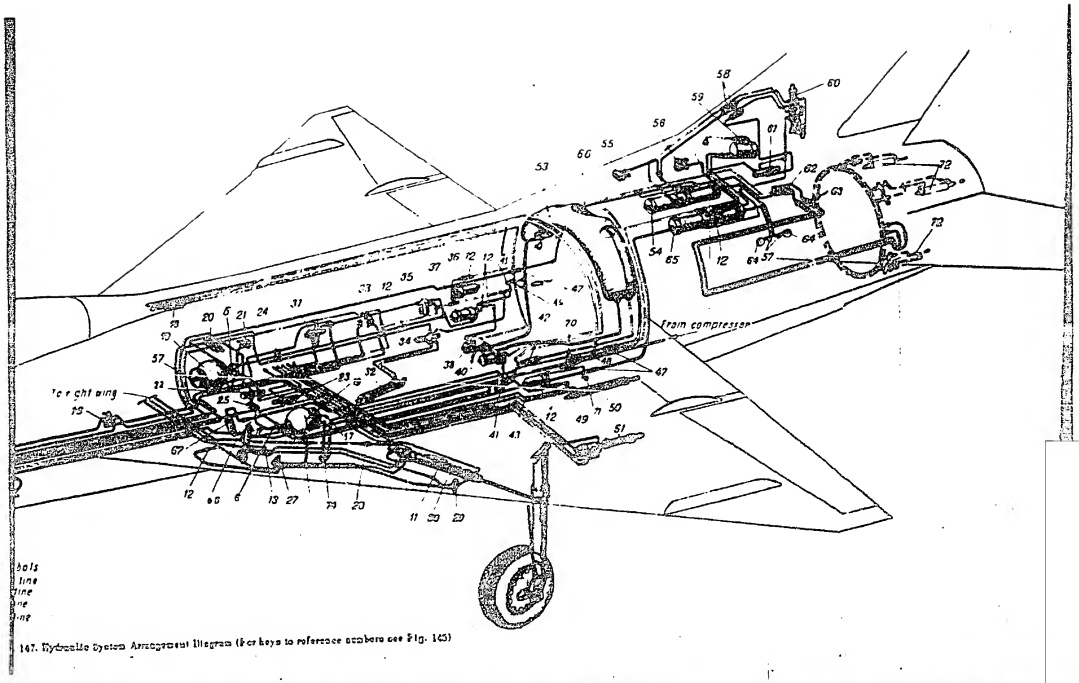

147. Hydraulic System Arrangement Diagram (Key keys to reference numbers see Fig. 145)

SECRET
NO FOREIGN DISS-1

50X1-HUM

POOR ORIGINAL

Sanitized Copy Approved for Release 2011/02/18 : CIA-RDP82-00038R001700250001-7

Sanitized Copy Approved for Release 2011/02/18 : CIA-RDP82-00038R001700250001-7

POOR ORIGINAL

50X1-HUM

SECRET
NO FOREIGN DISSEM

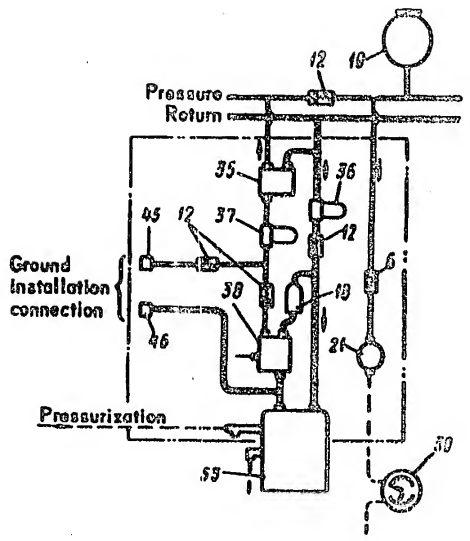

Fig.140. Pressure Section (For keys to reference numbers see Fig.145)

SECRET

NO FOREIGN DISSEM

Sanitized Copy Approved for Release 2011/02/18 : CIA-RDP82-00038R001700250001-7

Sanitized Copy Approved for Release 2011/02/18 : CIA-RDP82-00038R001700250001-7

SECRET
NO FOREIGN DISSEM

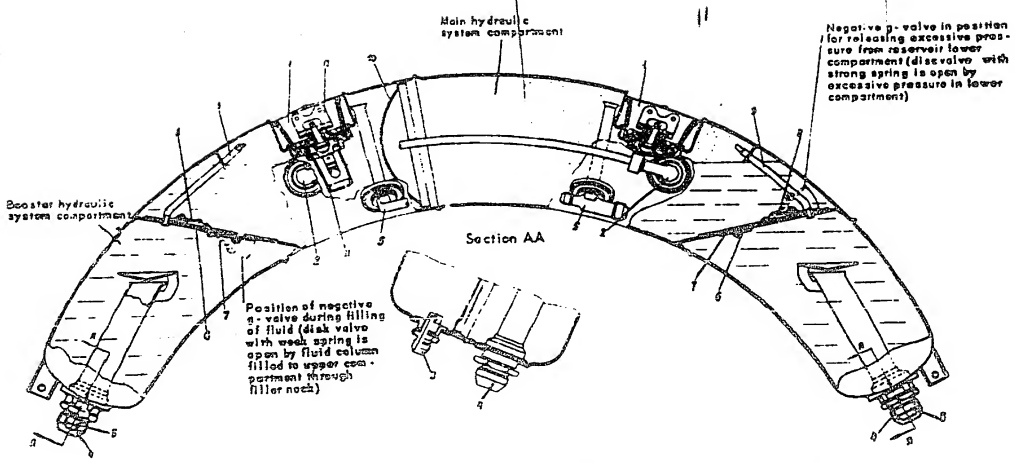

Fig.149. Hydraulic Reservoir

1 – filler neck; 2 – overflow pipe; 3 – return connection; 4 – suction connection; 5 – pressurization and connection tube; 6 – separating diaphragm; 7 – weak spring valve; 8 – valve with strong spring; 9 – vent pipe; 10 – pressurized diaphragm; 11 – gauze filter; 12 – plug with level stick.

50X1-HUM

POOR ORIGINAL

Sanitized Copy Approved for Release 2011/02/18 : CIA-RDP82-00038R001700250001-7

Sanitized Copy Approved for Release 2011/02/18 : CIA-RDP82-00038R001700250001-7

POOR ORIGINAL

50X1-HUM

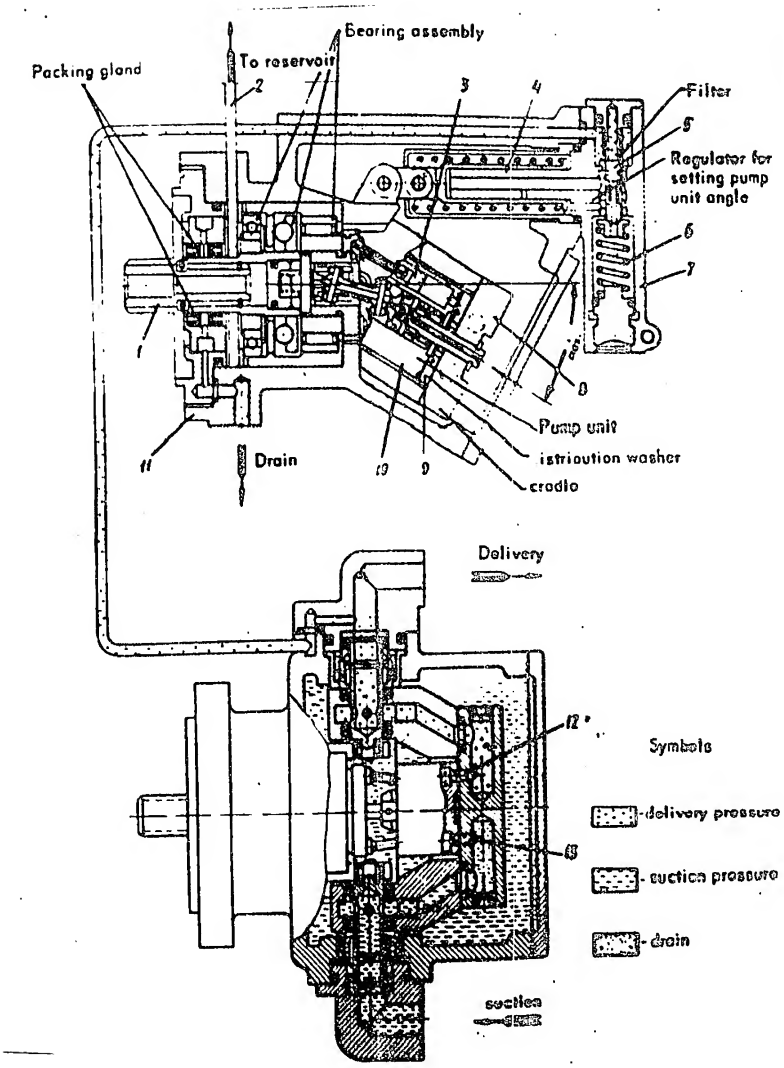

Fig.150. H1134-2T Pump

1 – pump shaft; 2 – outer circulating line; 3 – piston; 4 – capacity regulator cylinder; 5 – regulator slide valve; 6 – adjusting spring; 7 – regulator body; 8 – cradle; 9 – slide valve; 10 – cylinder unit; 11 – body; 12 – pressure line; 13 – suction line.

Sanitized Copy Approved for Release 2011/02/18 : CIA-RDP82-00038R001700250001-7

Sanitized Copy Approved for Release 2011/02/18 : CIA-RDP82-00038R001700250001-7

50X1-HUM

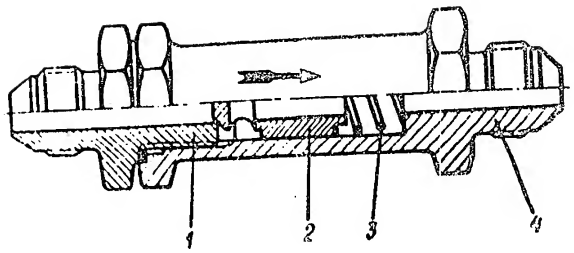

Fig.151. Check Valve
1 – connection; 2 – piston; 3 – spring; 4 – body.

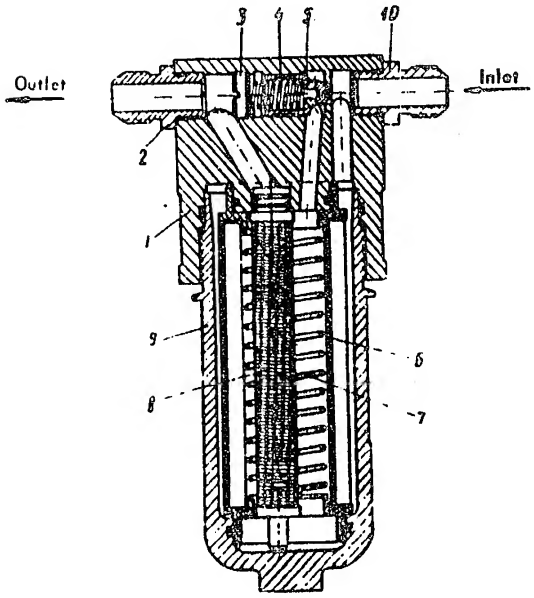

Fig.152. ФГ-11/2 Filter
1 – cover; 2 – outlet connection; 3 – nut; 4 – spring; 5 – by-pass valve; 6 – line filtering element; 7 – spring; 8 – coarse filter; 9 – cap. 10 – outlet connection.

POOR ORIGINAL

Sanitized Copy Approved for Release 2011/02/18 : CIA-RDP82-00038R001700250001-7

Sanitized Copy Approved for Release 2011/02/18 : CIA-RDP82-00038R001700250001-7

POOR ORIGINAL

50X1-HUM

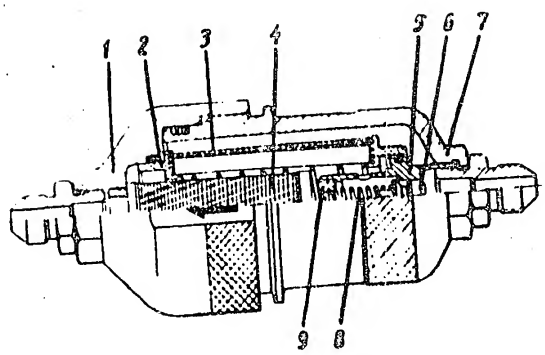

Fig.153. ПГФ4 Filter

1 – cover; 2 – filtering element head; 3 – fine filtering element; 4 – coarse filter; 5 – by-pass valve body; 6 – by-pass valve; 7 – cup; 8 – spring; 9 – nut.

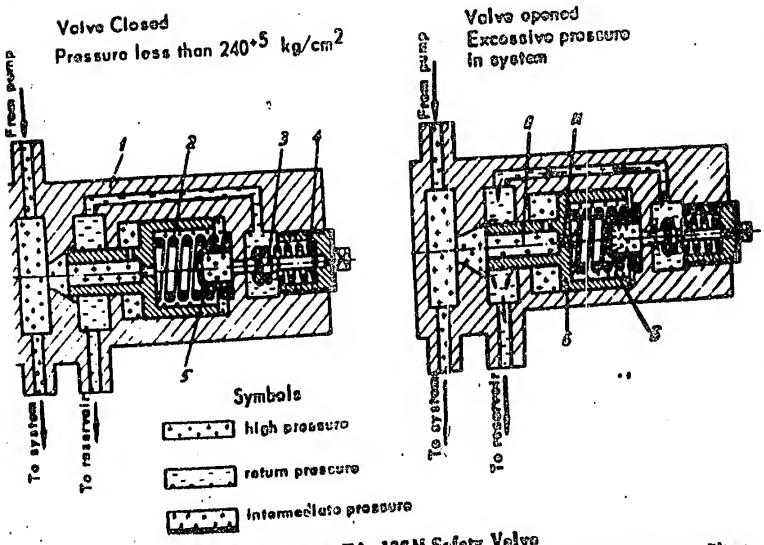

Fig.154. ГА-186М Safety Valve

1 – body; 2 – retraction spring; 3 – pressure sensing valve; 4 – adjusting spring; 5 – filter; 6 – main valve.

Sanitized Copy Approved for Release 2011/02/18 : CIA-RDP82-00038R001700250001-7

Sanitized Copy Approved for Release 2011/02/18 : CIA-RDP82-00038R001700250001-7

50X1-HUM

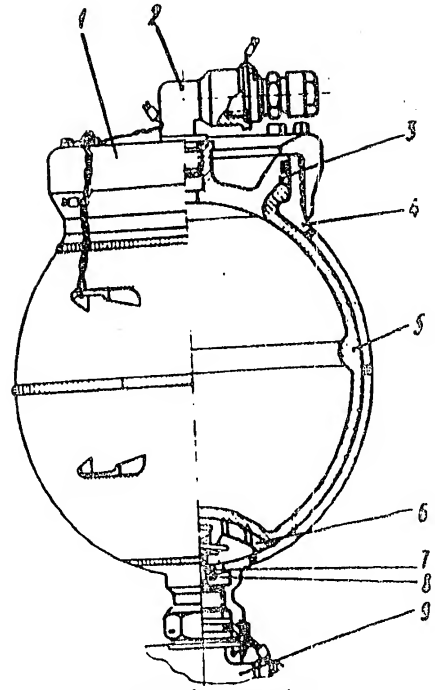

Accumulator operation

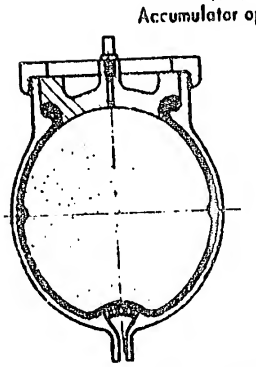

Initial position: gas cavity filled with nitrogen

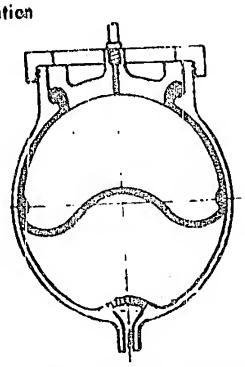

Working position: hydraulic cavity filled with fluid under pressure

Fig.155. Spherical Accumulator

1 – n[illegible] 2 – [illegible]ging valve with elbow; 3 – cover; 4 – body; 5 – diaphragm; 6 – mushroom-type surface; 7 – screw; 8 – nut; 9 – collector.

POOR ORIGINAL

Sanitized Copy Approved for Release 2011/02/18 : CIA-RDP82-00038R001700250001-7

Sanitized Copy Approved for Release 2011/02/18 : CIA-RDP82-00038R001700250001-7

POOR ORIGINAL

50X1-HUM

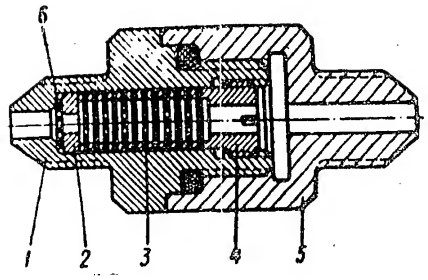

Fig.156. Flow Restrictor
1 – body; 2 – support; 3 – throttling washer; 4 – nut; 5 – cover; 6 – grate.

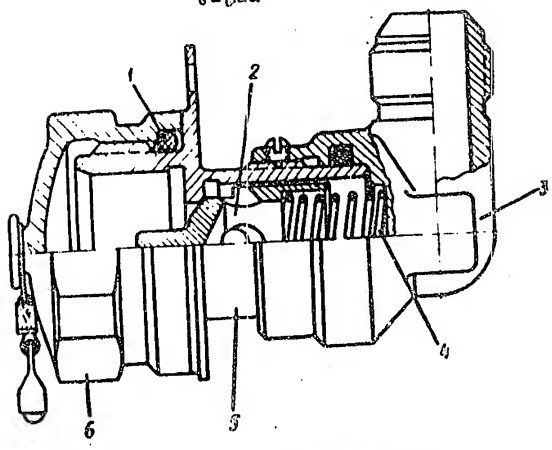

Fig.157. Aircraft Connection
1 – ring; 2 – valve; 3 – elbow; 4 – spring; 5 – body; 6 – plug.

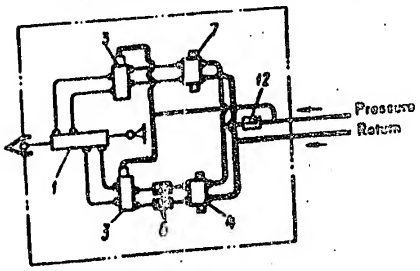

Fig.158. Gear Control System
(For keys to reference numbers see Fig.160)

Sanitized Copy Approved for Release 2011/02/18 : CIA-RDP82-00038R001700250001-7

Sanitized Copy Approved for Release 2011/02/18 : CIA-RDP82-00038R001700250001-7

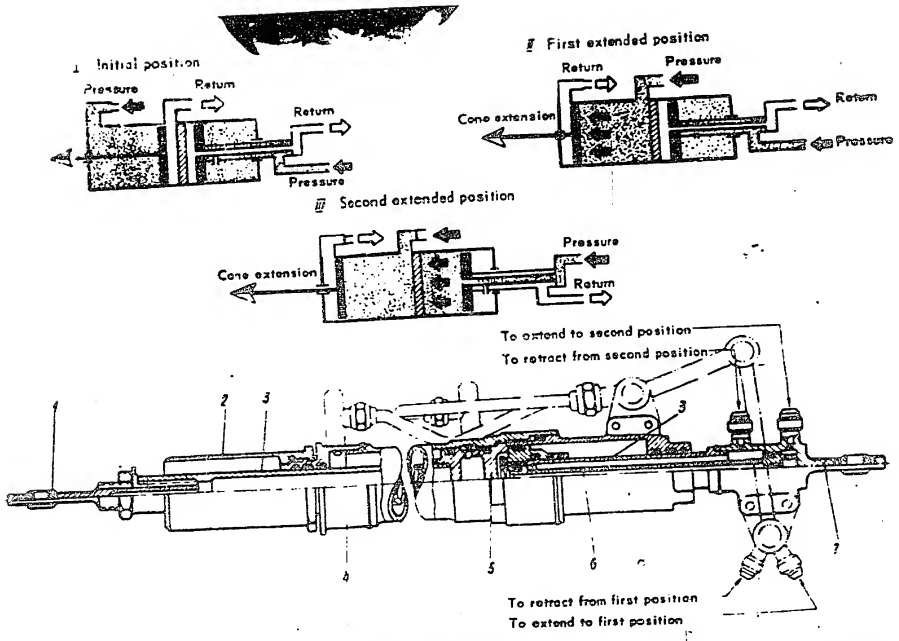

Fig.159. Cone Cylinder

1 — eyebolt; 2 — bushi; 3 — rod; 4 — liner; 5 — insert; 6 — inner rod; 7 — stationary rod; 8 — liner.

50X1-HUM

POOR ORIGINAL

Sanitized Copy Approved for Release 2011/02/18 : CIA-RDP82-00038R001700250001-7

Sanitized Copy Approved for Release 2011/02/18 : CIA-RDP82-00038R001700250001-7

SECRET
NO FOREIGN DISSEM

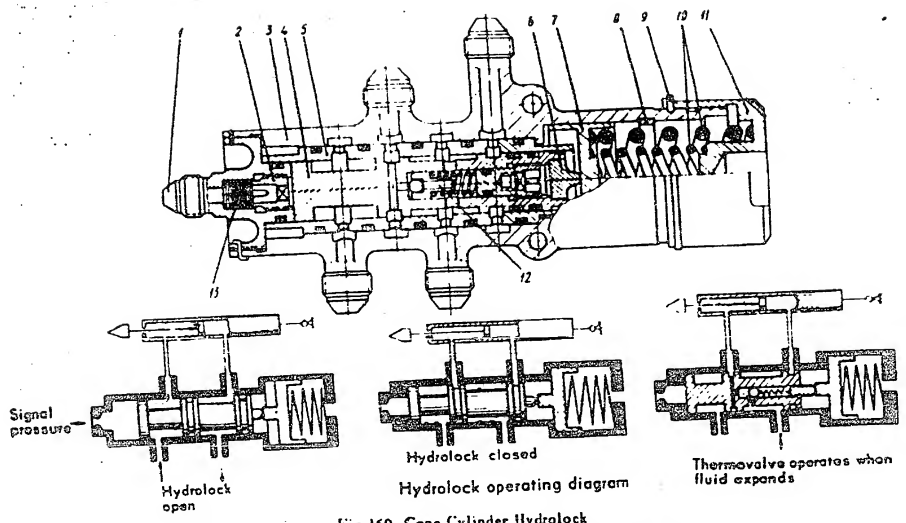

Fig.160. Cone Cylinder Hydrolock

1 – connection for signal pressure; 2 – nut; 3 – body; 4 – slide valve; 5 – bush; 6 – support; 7 – piston; 8 – lock; 9 – locking ring; 10 – adjusting springs; 11 – cover; 12 – thermovalve; 13 – throttling assembly.

SECRET
NO FOREIGN DISSEM

50X1-HUM

POOR ORIGINAL

Sanitized Copy Approved for Release 2011/02/18 : CIA-RDP82-00038R001700250001-7

Sanitized Copy Approved for Release 2011/02/18 : CIA-RDP82-00038R001700250001-7

50X1-HUM

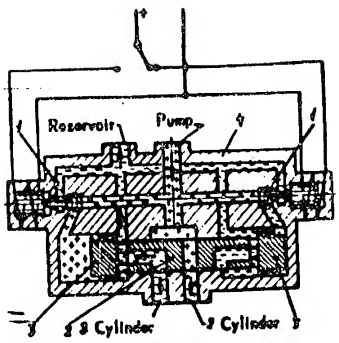

Right-hand electromagnet energized. Slide valve is shifted to extreme right position and connects "PUMP" connection with "2 CYLINDER" connection and "3 CYLINDER" connection with "RESERVOIR" connection

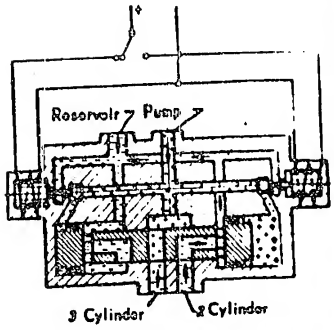

Left-hand electromagnet energized. Slide valve is shifted to extreme left position and connects "PUMP" connection with "3 CYLINDER" connection and "2 CYLINDER" connection with "RESERVOIR"

Working pressure
Return line pressure

Fig.161. ГА-165 Valve

1 – ball valve; 2 – slide valve; 3 – pistons; 6 – housing.

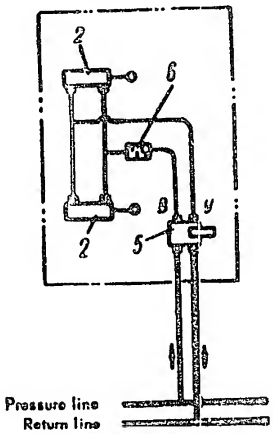

Fig.162. Anti-Surge Shutter Control System
(For keys to reference numbers see Fig.165)

POOR ORIGINAL

Sanitized Copy Approved for Release 2011/02/18 : CIA-RDP82-00038R001700250001-7

Sanitized Copy Approved for Release 2011/02/18 : CIA-RDP82-00038R001700250001-7

POOR ORIGINAL

50X1-HUM

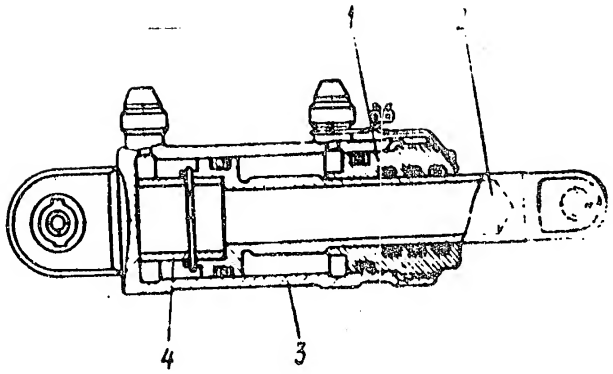

Fig.163. Shuttem Cylinder
1 – nut; 2 – rod; 3 – body; 4 – limiting bush.

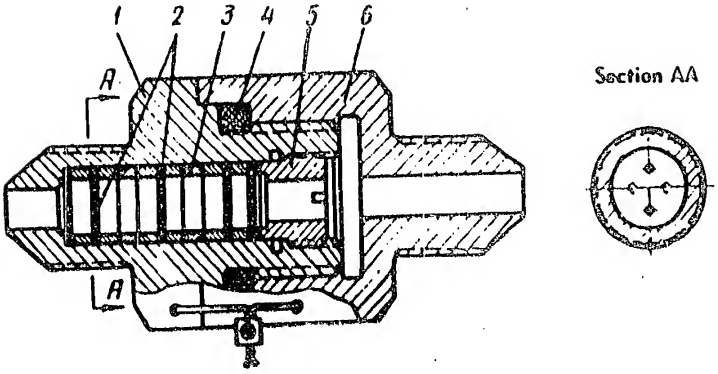

Fig.164. Shuttem Throttle
1 – body; 2 – throttle; 3 – spacing ring; 4 – packing ring; 5 – nut; 6 – cover.

Sanitized Copy Approved for Release 2011/02/18 : CIA-RDP82-00038R001700250001-7

Sanitized Copy Approved for Release 2011/02/18 : CIA-RDP82-00038R001700250001-7

SECRET
NO FOREIGN DISSEM

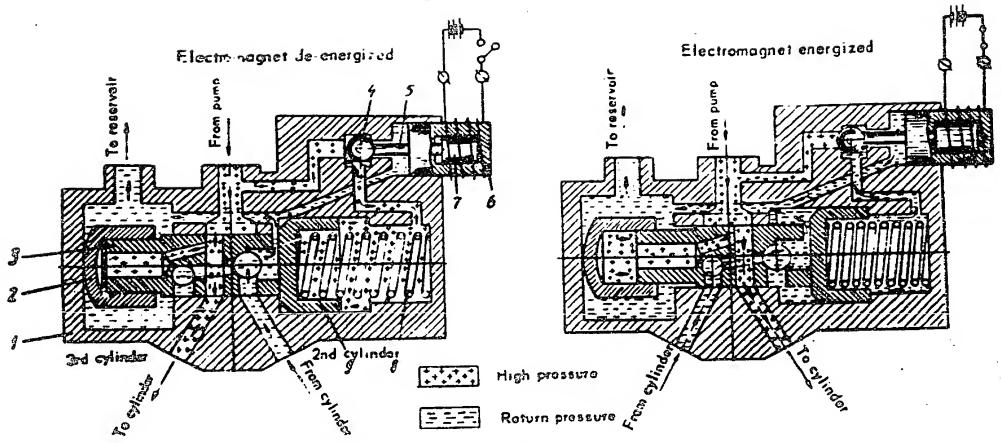

Fig. 165. PV-184 Valve

1 – body; 2 – piston; 3 – slide valve; 4 – ball valve; 5 – [illegible]; 6 – coil body; 7 – core; 8 – spring; 9 – piston.

SECRET
NO FOREIGN DISSEM

50X1-HUM

POOR ORIGINAL

Sanitized Copy Approved for Release 2011/02/18 : CIA-RDP82-00038R001700250001-7

Sanitized Copy Approved for Release 2011/02/18 : CIA-RDP82-00038R001700250001-7

POOR ORIGINAL

50X1-HUM

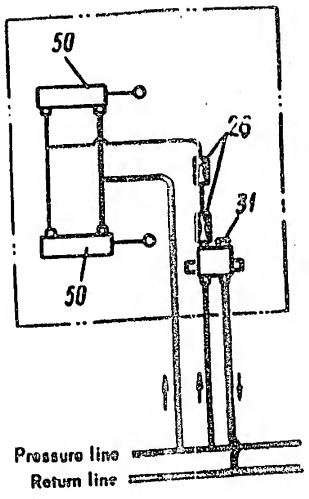

Fig.166. Wing Flaps Control System
(For keys to reference numbers see Fig.165)

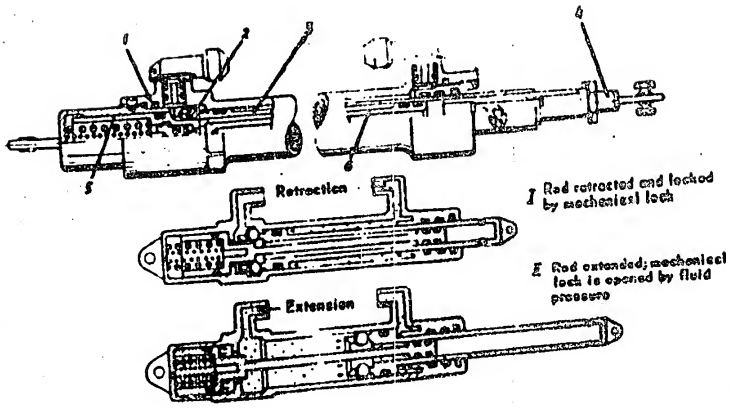

Fig.167. Wing Flap Cylinder
1 – body; 2 – ball lock; 3 – rod; 4 – adjusting bolt; 5 – bush; 6 – stationary rod.

Sanitized Copy Approved for Release 2011/02/18 : CIA-RDP82-00038R001700250001-7

Sanitized Copy Approved for Release 2011/02/18 : CIA-RDP82-00038R001700250001-7

SECRET
NO FOREIGN DISSEM

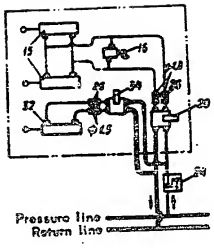

Fig.168. Air Brake Control System
(For keys to reference numbers see Fig.145)

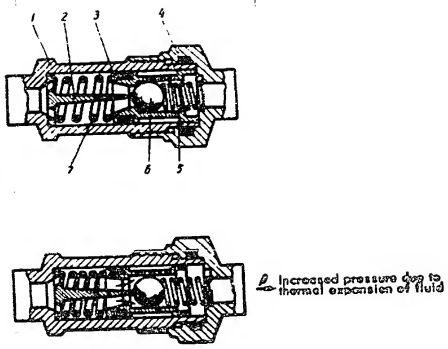

Fig.169. Air Brake Thermovalve
1 – body; 2 – rest; 3 – seat; 4 – cover; 5 – spring; 6 – ball; 7 – calibrated spring.

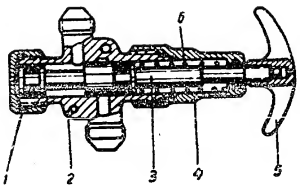

Fig.170. Cross-Feed Valve
1 – cover; 2 – body; 3 – rod; 4 – cover; 5 – handle; 6 – retracting spring.

SECRET
NO FOREIGN DISSEM

50X1-HUM

POOR ORIGINAL

Sanitized Copy Approved for Release 2011/02/18 : CIA-RDP82-00038R001700250001-7

Sanitized Copy Approved for Release 2011/02/18 : CIA-RDP82-00038R001700250001-7

POOR ORIGINAL

50X1-HUM

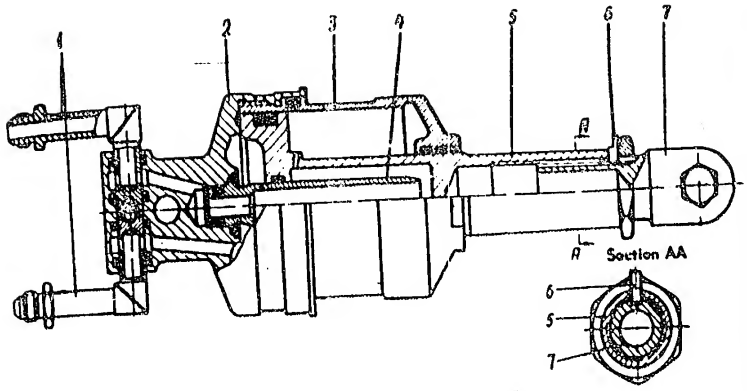

Fig.171. Side Air Brake Cylinder
1 – connection; 2 – cover; 3 – body; 4 – inner bush; 5 – rod; 6 – slide block; 7 – eyebolt.

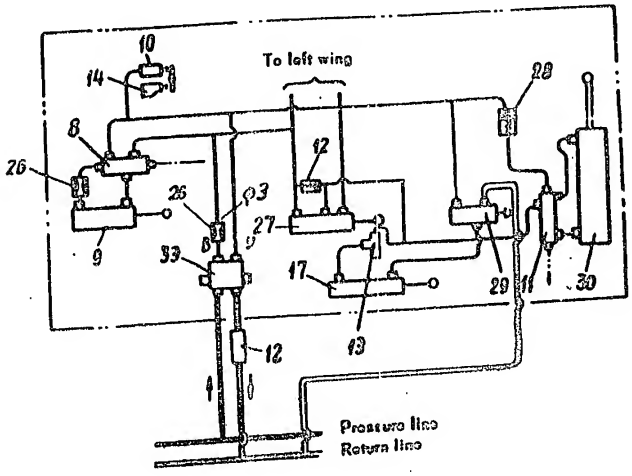

Fig.172. Landing Gear Control System
(For keys to reference numbers see Fig.169)

Sanitized Copy Approved for Release 2011/02/18 : CIA-RDP82-00038R001700250001-7

Sanitized Copy Approved for Release 2011/02/18 : CIA-RDP82-00038R001700250001-7

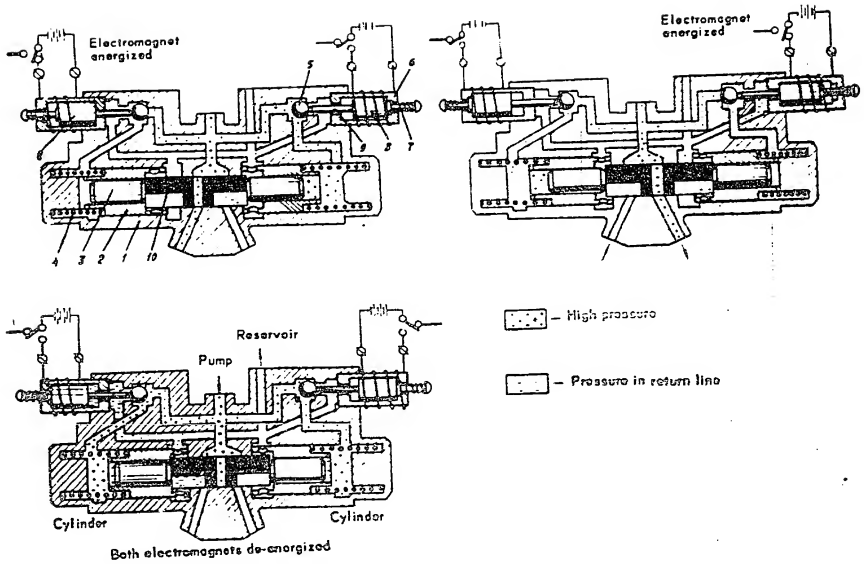

Fig.173. Landing Gear Valve ГА-142/1

1 – body; 2 – piston-bush; 3 – plunger; 4 – spring; 5 – ball valve; 6 – coil body; 7 – manual control button; 8 – core; 9 – tappet; 10 – slide valve.

SECRET
NO FOREIGN DISSEM

50X1-HUM

POOR ORIGINAL

Sanitized Copy Approved for Release 2011/02/18 : CIA-RDP82-00038R001700250001-7

Sanitized Copy Approved for Release 2011/02/18 : CIA-RDP82-00038R001700250001-7

POOR ORIGINAL

50X1-HUM

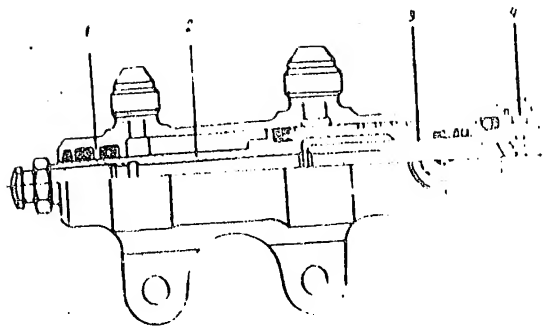

Fig.174. Up-Lock Cylinder
1 – body; 2 – rod; 3 – plunger; 4 – cover

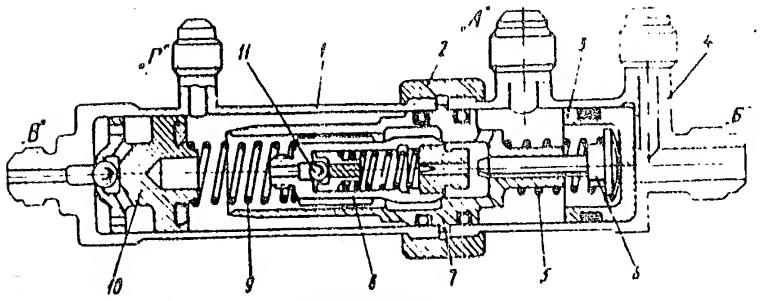

Hydrolock operation

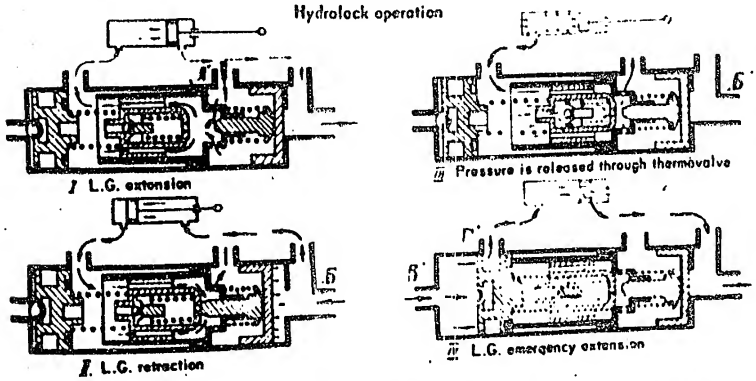

Fig.175. Landing Gear Hydrolock
1 – body; 2 – connecting nut; 3 – piston; 4 – body; 5 – retracting spring; 6 – tappet; 7 – sleeve; 8 – valve; 9 – retracting spring; 10 – emergency release valve; 11 – thermovalve.

Sanitized Copy Approved for Release 2011/02/18 : CIA-RDP82-00038R001700250001-7

Sanitized Copy Approved for Release 2011/02/18 : CIA-RDP82-00038R001700250001-7

50X1-HUM

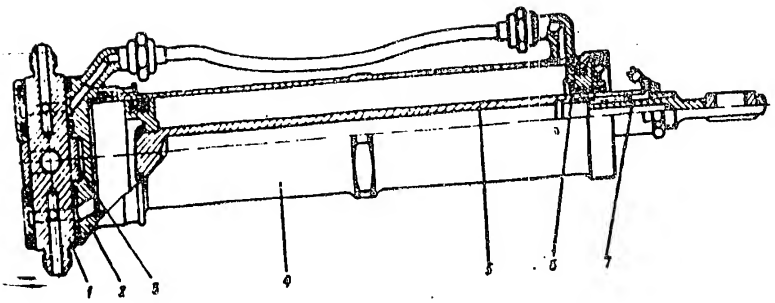

Fig.176. Nose Strut Actuating Cylinder

1 – hinge attachment fitting; 2 – upper cover; 3 – up-lock universal joint; 4 – sleeve; 5 – rod; 6 – cover; 7 – eyebolt.

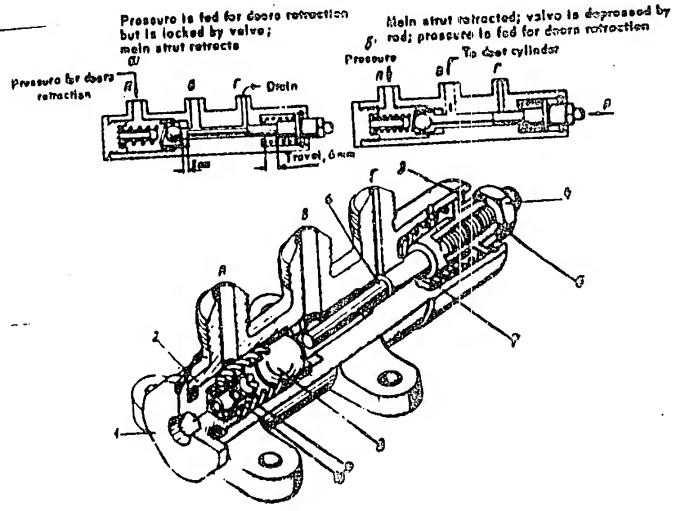

Fig.177. Segurace Valve

1 – cover; 2 – body; 3 – locking ring; 4 – locking nut; 5 – screw; 6 – rod; 7 – retraction spring; 8 – ball; 9 – spring; 10 – rest.

POOR ORIGINAL

Sanitized Copy Approved for Release 2011/02/18 : CIA-RDP82-00038R001700250001-7

Sanitized Copy Approved for Release 2011/02/18 : CIA-RDP82-00038R001700250001-7

SECRET
NO FOREIGN DISSEM

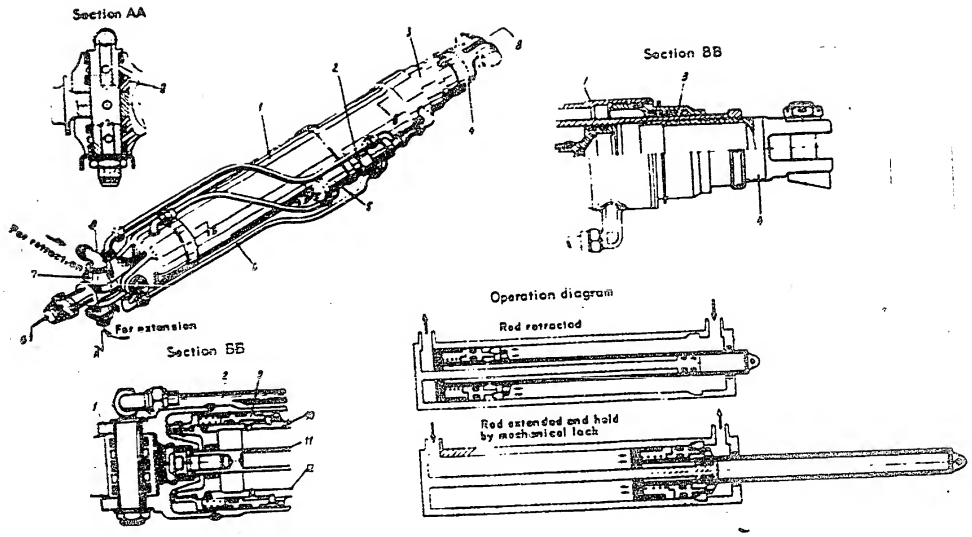

Fig.178. L.G. Main Strut Actuating Cylinder

1 – cylinder sleeve; 2 – retraction pipe line; 3 – lower cover; 4 – eyebolt; 5 – hydrolock; 6 – extension pipe line; 7 – L.G. attachment unit; 8 – universal joint; 9 – locking bush; 10 – rod; 11 – inner piston; 12 – expansion ring.

SECRET
NO FOREIGN DISSEM

50X1-HUM

POOR ORIGINAL

Sanitized Copy Approved for Release 2011/02/18 : CIA-RDP82-00038R001700250001-7

Sanitized Copy Approved for Release 2011/02/18 : CIA-RDP82-00038R001700250001-7

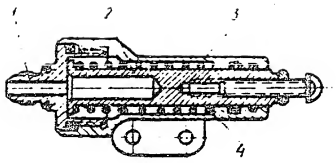

Fig.179. Automatic Braking Cylinder
1 – cover; 2 – rod; 3 – body; 4 – retraction spring.

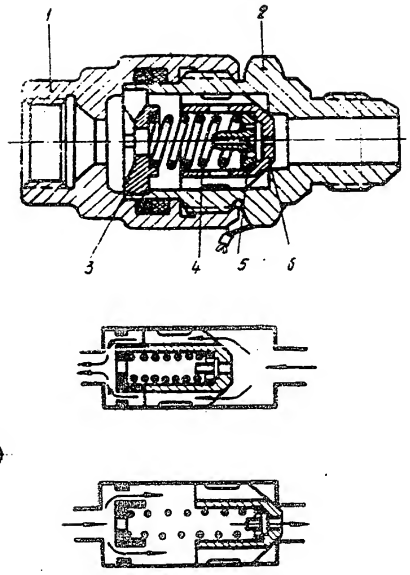

Fig.180. One-Way Restrictor
1 – body; 2 – cover; 3 – support; 4 – retraction spring; 5 – protective screen; 6 – plunger.

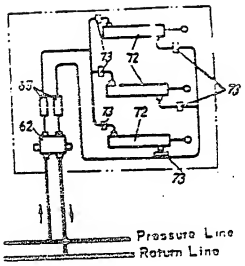

Fig.181. Engine Nozzle Flaps Control System
(See Ref. Nos in Fig.146)

SECRET
NO FOREIGN DISSEM

50X1-HUM

POOR ORIGINAL

Sanitized Copy Approved for Release 2011/02/18 : CIA-RDP82-00038R001700250001-7

Sanitized Copy Approved for Release 2011/02/18 : CIA-RDP82-00038R001700250001-7

POOR ORIGINAL

50X1-HUM

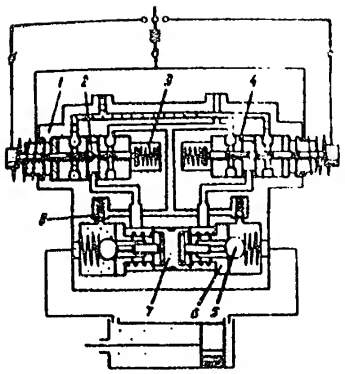

Electromagnets cut off. Delivery of fluid into cylinder stopped. Cylinder cavities closed

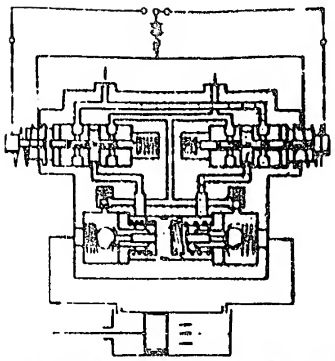

Right-hand electromagnet energized. Fluid is delivered into cylinder right-hand cavity. Left-hand cavity connected to return line.

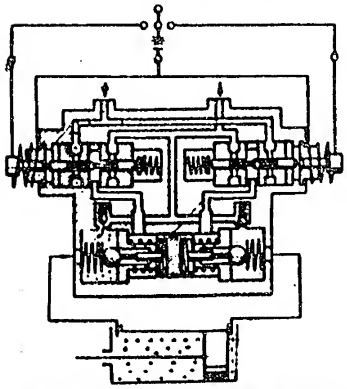

Electromagnets cut off. Pressure in cylinder left-hand cavity exceeds working pressure. Thermal valve operates.

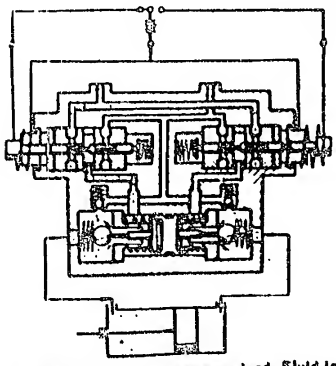

Left-hand electromagnet energized. Fluid is delivered into cylinder left-hand cavity. Right-hand cavity connected to return line.

Fig.182. PA-164M Hydraulic Valve

1 – body; 2 – transmitter; 3 – spring; 4 – bushing; 5 – ball; 6 – bushing; 7 – piston; 8 – thermal valve.

Sanitized Copy Approved for Release 2011/02/18 : CIA-RDP82-00038R001700250001-7

Sanitized Copy Approved for Release 2011/02/18 : CIA-RDP82-00038R001700250001-7

SECRET
NO FOREIGN DISSEM

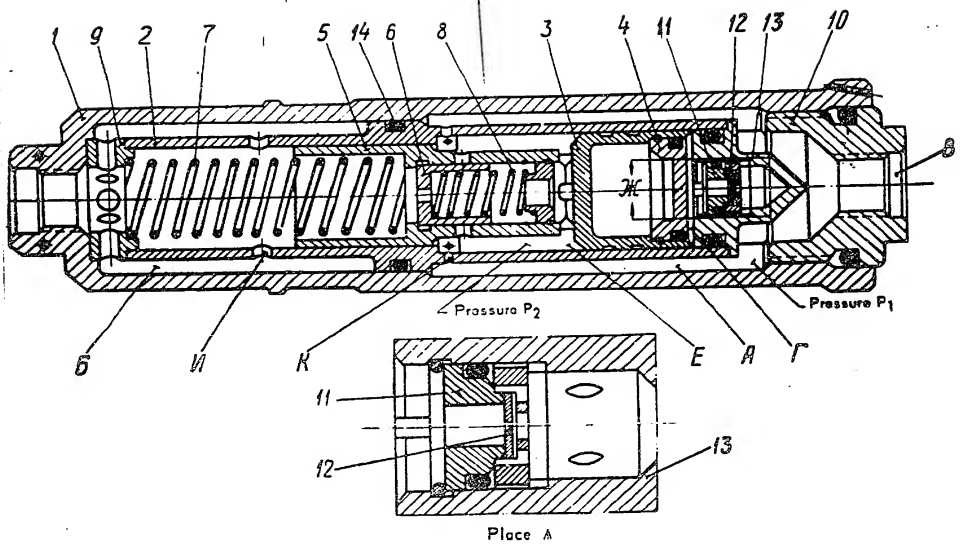

Fig. 183. PA-173 Metering Unit

1 — body; 2 — sleeve; 3 — floating valve; 4 — valve bottom; 5 — slide valve; 6 — valve; 7 — spring; 8 — spring; 9 — stop; 10 — cover; 11 — seat; 12 — diaphragm; 13 — sleeve cover; 14 — packing ring.

SECRET
NO FOREIGN DISSEM

50X1-HUM

POOR ORIGINAL

Sanitized Copy Approved for Release 2011/02/18 : CIA-RDP82-00038R001700250001-7

Sanitized Copy Approved for Release 2011/02/18 : CIA-RDP82-00038R001700250001-7

SECRET
NO FOREIGN DISSEM

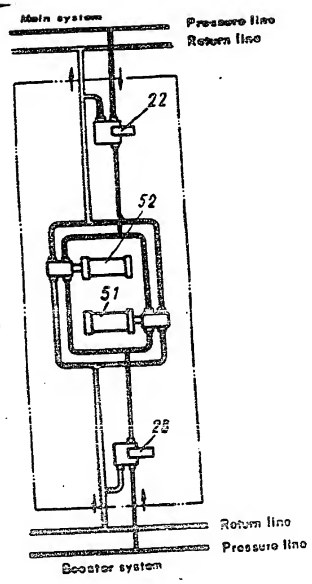

Fig.184. Diagram of BY-45A Booster Supply from Main and Booster Systems (See Ref. Nos in Fig.146)

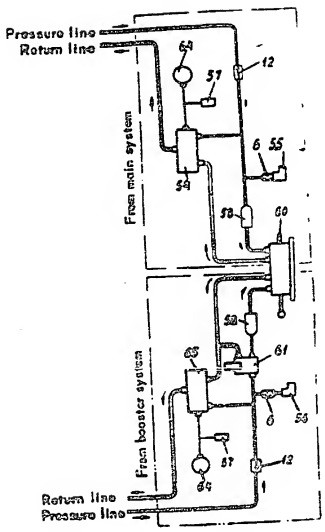

Fig.185. Diagram of BY-51MC Booster Supply from Main and Booster Systems (See Ref. Nos in Fig.146)

SECRET
NO FOREIGN DISSEM

50X1-HUM

POOR ORIGINAL

Sanitized Copy Approved for Release 2011/02/18 : CIA-RDP82-00038R001700250001-7

Sanitized Copy Approved for Release 2011/02/18 : CIA-RDP82-00038R001700250001-7

SECRET
NO FOREIGN DISSEM

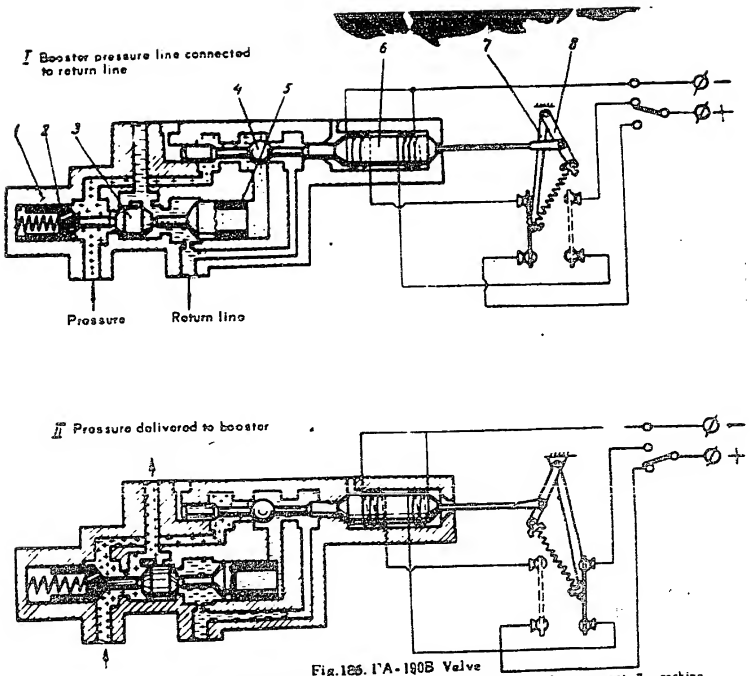

Fig.125. 1'A-190B Valve

1 – body; 2 – pistons; 3 – distributing slide valve; 4 – ball valve; 5 – piston; 6 – electromagnet; 7 – rocking shaft; 8 – hinged lever.

SECRET
NO FOREIGN DISSEM

50X1-HUM

POOR ORIGINAL

Sanitized Copy Approved for Release 2011/02/18 : CIA-RDP82-00038R001700250001-7

Sanitized Copy Approved for Release 2011/02/18 : CIA-RDP82-00038R001700250001-7

SECRET
NO FOREIGN DISSEM

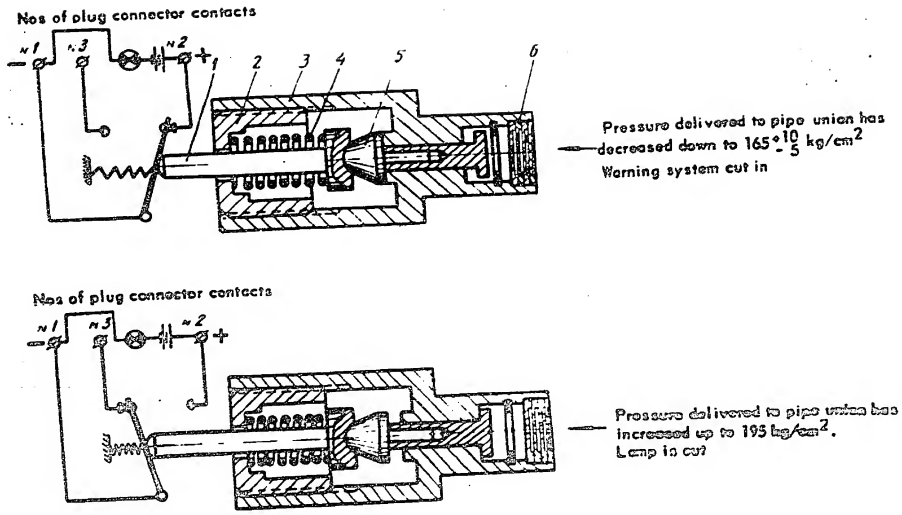

Fig.187. PA-135T Pressure-Sensitive Relay
1 – seat; 2 – nut; 3 – body; 4 – spring; 5 – tappet; 6 – damper.

SECRET
NO FOREIGN DISSEM

50X1-HUM

POOR ORIGINAL

Sanitized Copy Approved for Release 2011/02/18 : CIA-RDP82-00038R001700250001-7

Sanitized Copy Approved for Release 2011/02/18 : CIA-RDP82-00038R001700250001-7

SECRET
NO FOREIGN DISSEM

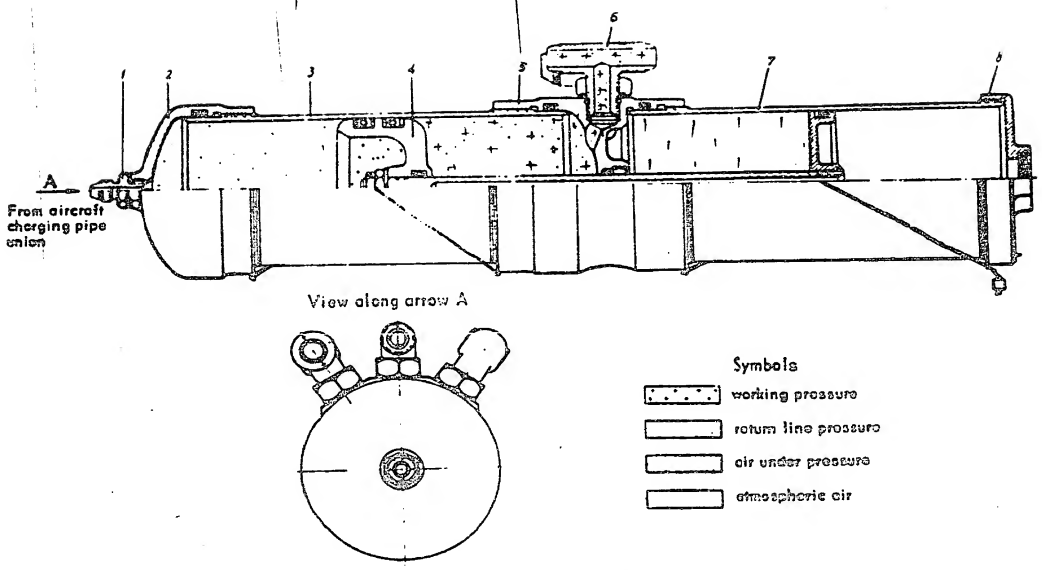

Fig. 188. Cylindrical Hydraulic Accumulator

1 – charging pipe union; 2 – cover; 3 – high-pressure chamber; 4 – piston assembly; 5 – connecting sleeve; 6 – pipe unions; 7 – low-pressure chamber; 8 – cover.

50X1-HUM

POOR ORIGINAL

Sanitized Copy Approved for Release 2011/02/18 : CIA-RDP82-00038R001700250001-7

Sanitized Copy Approved for Release 2011/02/18 : CIA-RDP82-00038R001700250001-7

SECRET
NO FOREIGN DISSEM

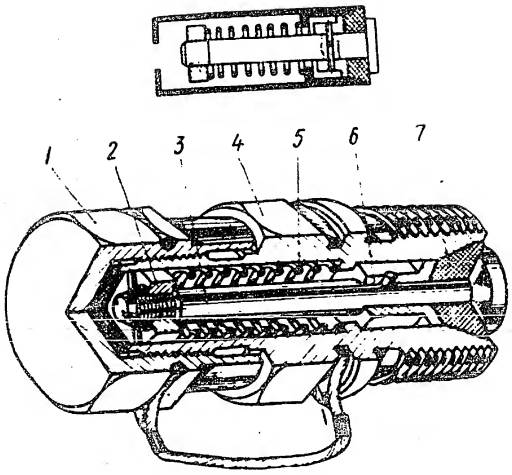

Fig.189. 800600 \ Charging Valve
1 — cover; 2 — nut; 3 — pressure rod; 4 — body; 5 — spring; 6 — bush; 7 — rubber & capered washer.

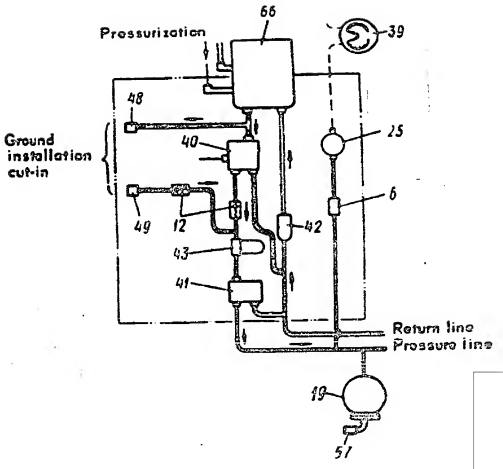

Fig.190. Booster System Pressure Section
(See Ref. Nos in Fig.146)

SECRET
NO FOREIGN DISSEM

50X1-HUM

POOR ORIGINAL

Sanitized Copy Approved for Release 2011/02/18 : CIA-RDP82-00038R001700250001-7

Sanitized Copy Approved for Release 2011/02/18 : CIA-RDP82-00038R001700250001-7

50X1-HUM

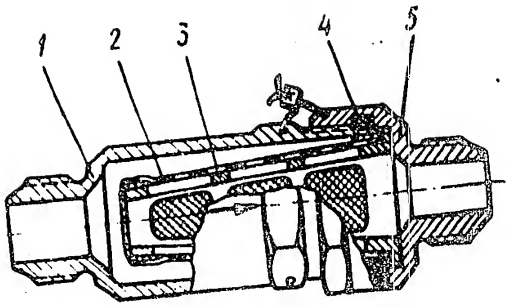

Fig.191. Gauze Filter
1 – body; 2 – filter; 3 – filter frame; 4 – packing ring; 5 – cover.

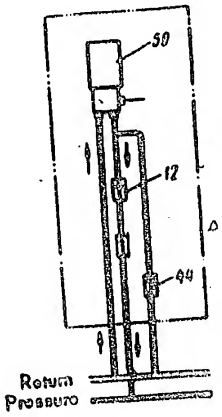

Fig.192. Emergency Pump Unit System
(See Ref. Nos in Fig.163)

POOR ORIGINAL

Sanitized Copy Approved for Release 2011/02/18 : CIA-RDP82-00038R001700250001-7

Sanitized Copy Approved for Release 2011/02/18 : CIA-RDP82-00038R001700250001-7

SECRET
NO FOREIGN DISSEM

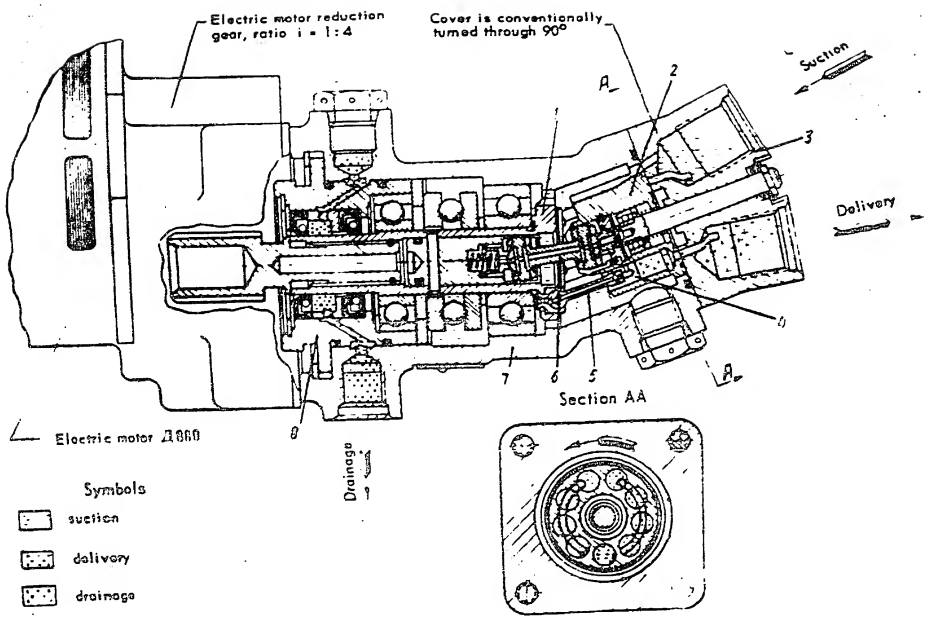

Fig.193. НП-27Т Emergency Pump Unit

1 — pump shaft; 2 — rotor piston assembly; 3 — cover; 4 — piston; 5 — rod; 6 — ball [illegible] joint; 7 — h[illegible]; 8 — sl[illegible]

SECRET
NO FOREIGN DISSEM

50X1-HUM

POOR ORIGINAL

Sanitized Copy Approved for Release 2011/02/18 : CIA-RDP82-00038R001700250001-7

Sanitized Copy Approved for Release 2011/02/18 : CIA-RDP82-00038R001700250001-7

50X1-HUM

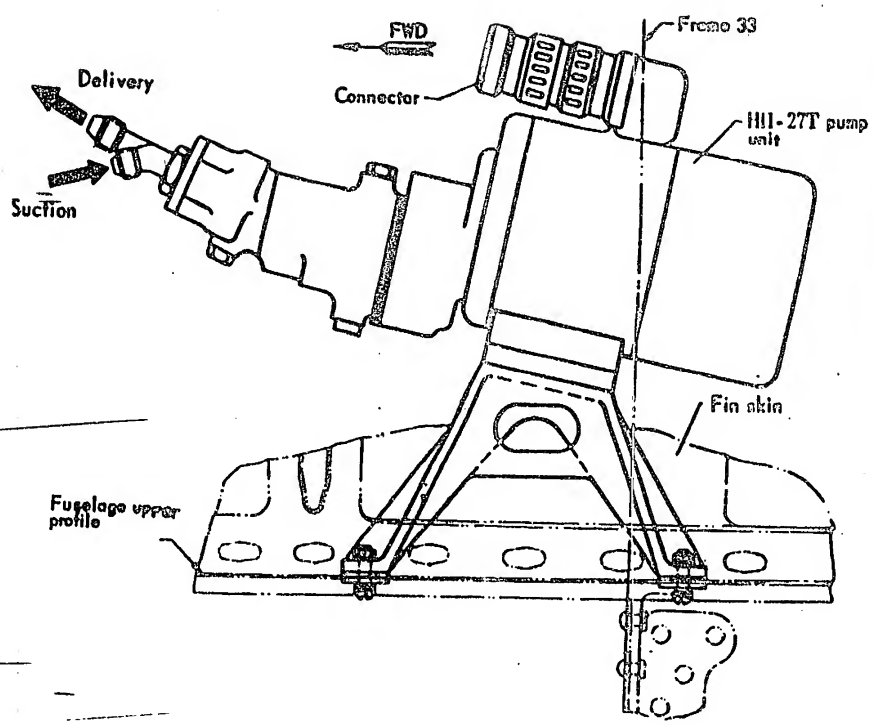

Fig.194. HII-27T Pump Unit Installation

POOR ORIGINAL

Sanitized Copy Approved for Release 2011/02/18 : CIA-RDP82-00038R001700250001-7

Sanitized Copy Approved for Release 2011/02/18 : CIA-RDP82-00038R001700250001-7

SECRET
NO FOREIGN DISSEM

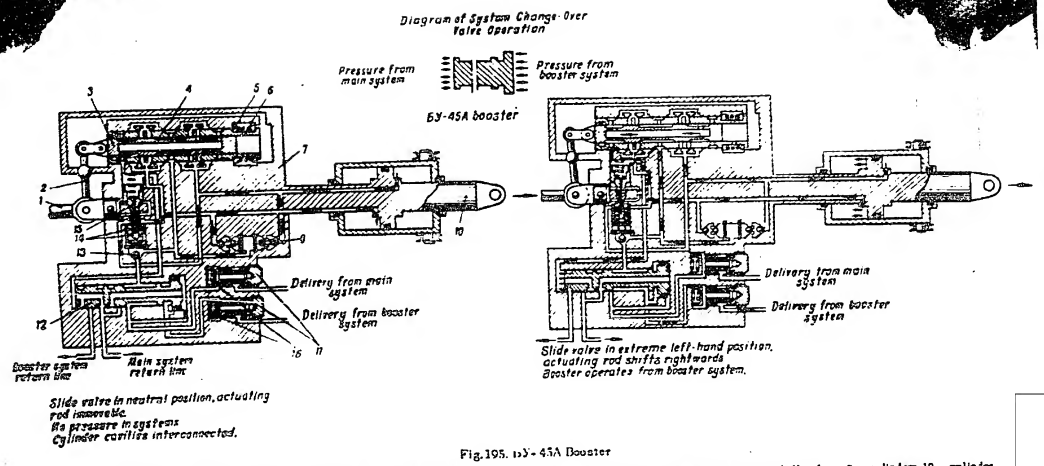

Fig.195. БУ-45А Booster

1 – eyebolt; 2 – lever; 3 – distributing slide valve; 4 – duplicating slide valve; 5 – bushing; 6 – spring; 7 – booster head; 8 – ball valves; 9 – cylinder; 10 – cylinder rod; 11 – taken filters; 12 – distributing slide valve; 13 – non-return valve; 14 – cross-feed valve; 15 – retainer; 16 – shut-off valve.

SECRET
NO FOREIGN DISSEM

50X1-HUM

POOR ORIGINAL

Sanitized Copy Approved for Release 2011/02/18 : CIA-RDP82-00038R001700250001-7

Sanitized Copy Approved for Release 2011/02/18 : CIA-RDP82-00038R001700250001-7

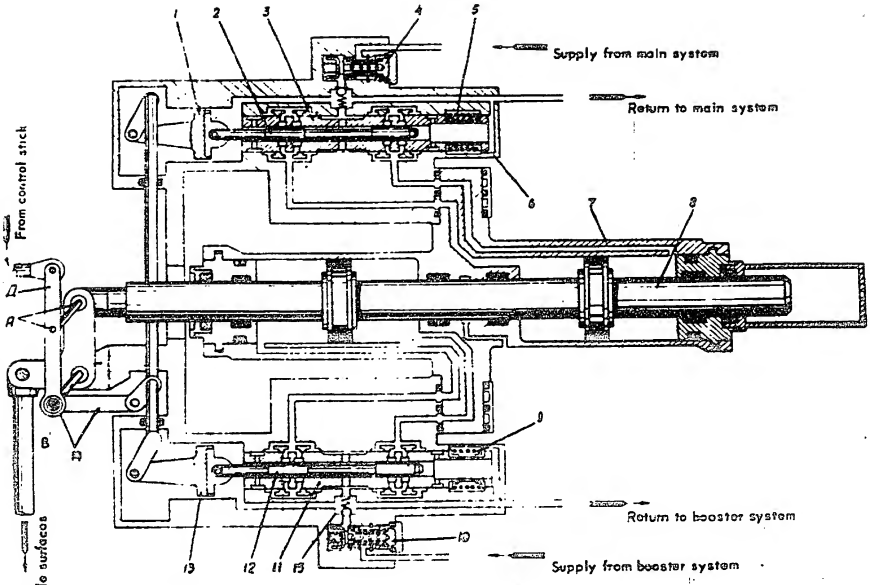

Fig.196. БУ-51МС Booster

1 – damper; 2 – main distributing slide valve; 3 – duplicating slide valve; 4 – inlet filter; 5 – duplicating slide valve spring; 6 – bracket; 7 – cylinder; 8 – actuating cylinder rod; 9 – duplicating slide valve spring; 10 – inlet filter; 11 – duplicating slide valve; 12 – main slide valve; 13 – damper; 14 – system of rods, rocking shafts and levers (linkage mechanism); 15 – non-return valve

SECRET
NO FOREIGN DISSEM

50X1-HUM

POOR ORIGINAL

Sanitized Copy Approved for Release 2011/02/18 : CIA-RDP82-00038R001700250001-7

Sanitized Copy Approved for Release 2011/02/18 : CIA-RDP82-00038R001700250001-7

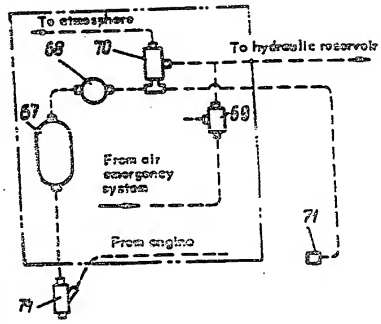

Fig.197. Hydraulic Reservoir Pressurization System
(See Ref. Nos in Fig.145)

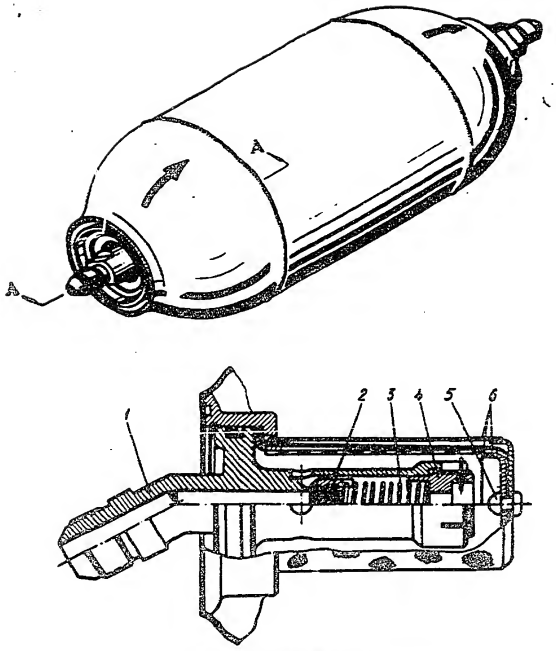

Fig.198. Pressurization Unit
1 – inlet pipe union; 2 – non-return valve; 3 – spring; 4 – support; 5 – rivet; 6 – silk and gauze filters.

SECRET
NO FOREIGN DISSEM

50X1-HUM

POOR ORIGINAL

Sanitized Copy Approved for Release 2011/02/18 : CIA-RDP82-00038R001700250001-7

Sanitized Copy Approved for Release 2011/02/18 : CIA-RDP82-00038R001700250001-7

50X1-HUM

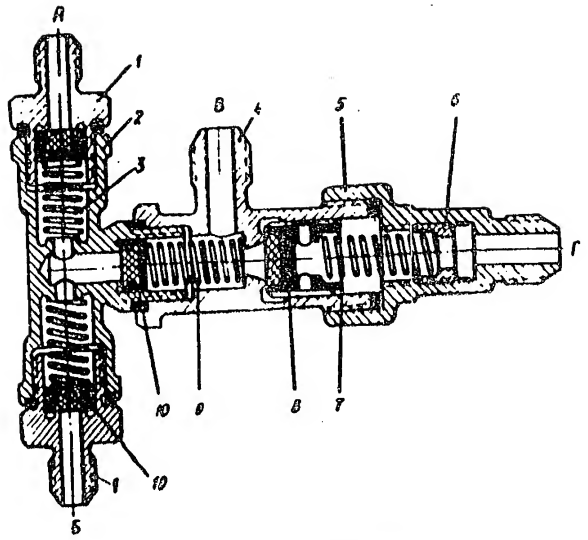

Fig.199. Pressurization Valve

1 – pipe union; 2 – T-piece; 3 – spring; 4 – body; 5 – cover; 6 – nut; 7 – spring; 8 – safety valve; 9 – spring; 10 – non-return valve.

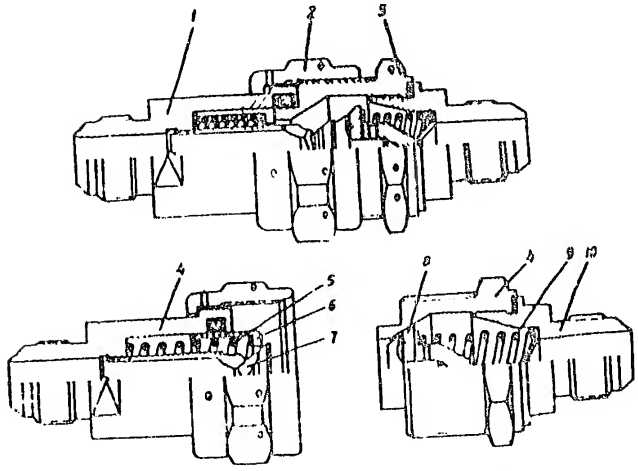

Fig.200. Line Disconnect Valve

1 – locking valve; 2 – union nut; 3 – locking valve; 4 – body; 5 – spring; 6 – sleeve; 7 – head; 8 – head; 9 – spring; 10 – pipe union.

POOR ORIGINAL

Sanitized Copy Approved for Release 2011/02/18 : CIA-RDP82-00038R001700250001-7

Sanitized Copy Approved for Release 2011/02/18 : CIA-RDP82-00038R001700250001-7

POOR ORIGINAL

50X1-HUM

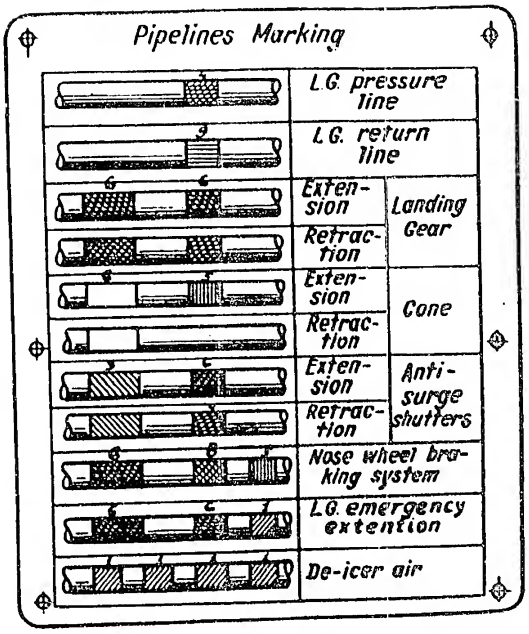

Fig.201. Pipelines Marking Plate (installed in nose strut well)
Designation of pipelines: 1 – red; 2 – dark red; 3 – rosy; 4 – blue; 5 – dark blue; 6 – emerald green; 7 – light green; 8 – yellow; 9 – grey.

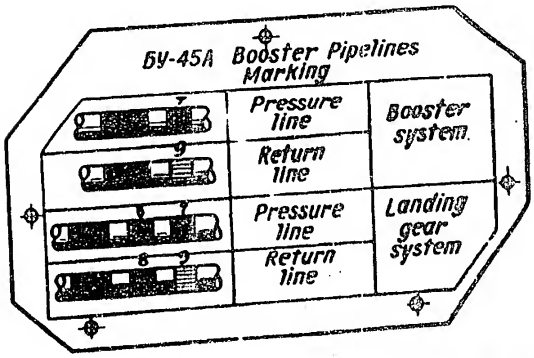

Fig.202. Pipelines Marking Plate (installed in each wing on БУ-45А booster hatch)

Sanitized Copy Approved for Release 2011/02/18 : CIA-RDP82-00038R001700250001-7

Sanitized Copy Approved for Release 2011/02/18 : CIA-RDP82-00038R001700250001-7

50X1-HUM

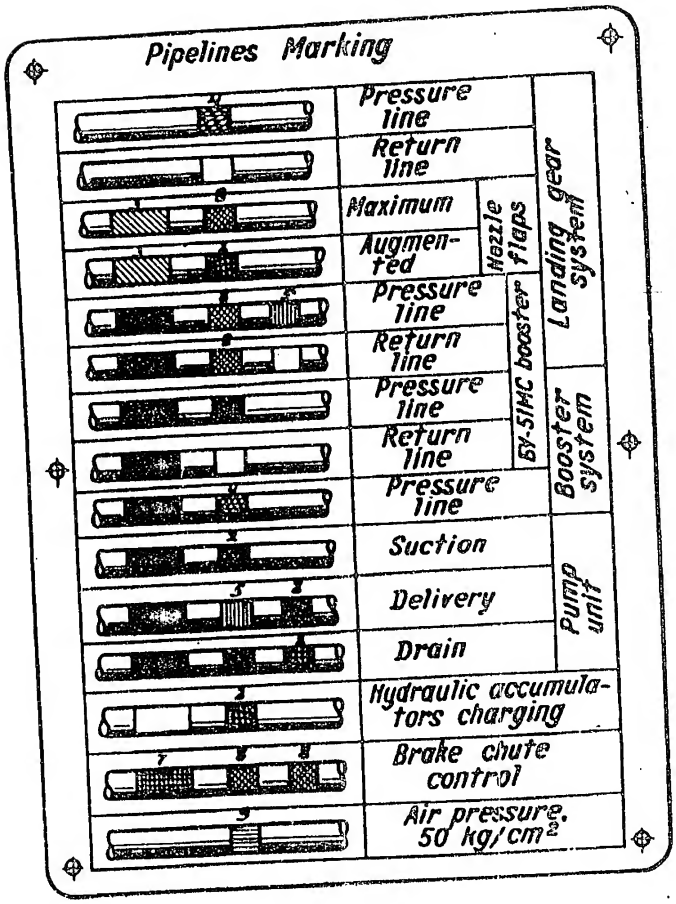

Fig.203. Pipelines Marking Plate (installed in Ш1-27 pump unit hatch)

POOR ORIGINAL

Sanitized Copy Approved for Release 2011/02/18 : CIA-RDP82-00038R001700250001-7

Sanitized Copy Approved for Release 2011/02/18 : CIA-RDP82-00038R001700250001-7

SECRET
NO FOREIGN DISSEM

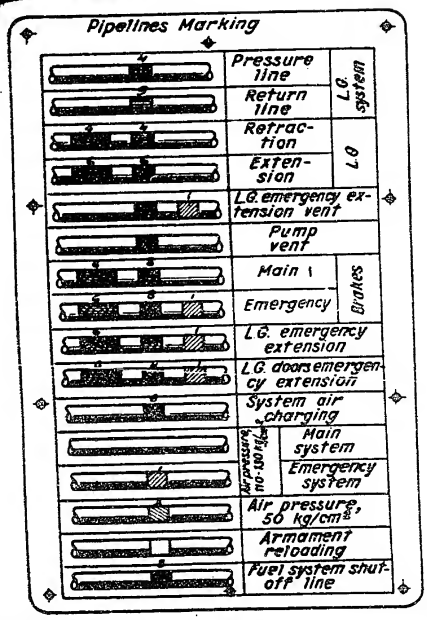

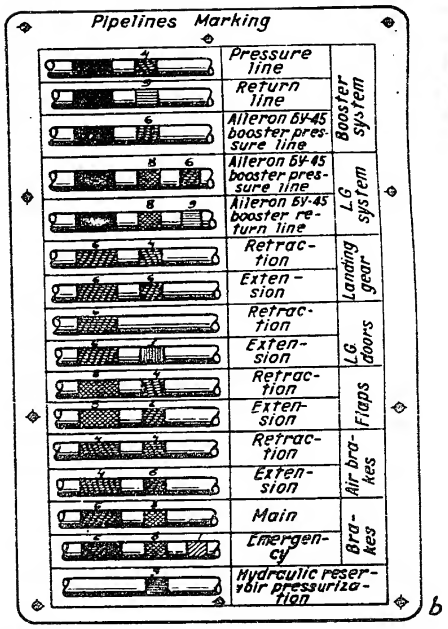

Fig.204. Pipelines Marking Plate (installed on wheel right-and left-hand brake flaps)

SECRET
NO FOREIGN DISSEM

50X1-HUM

POOR ORIGINAL

Sanitized Copy Approved for Release 2011/02/18 : CIA-RDP82-00038R001700250001-7

Sanitized Copy Approved for Release 2011/02/18 : CIA-RDP82-00038R001700250001-7

SECRET
NO FOREIGN DISSEM

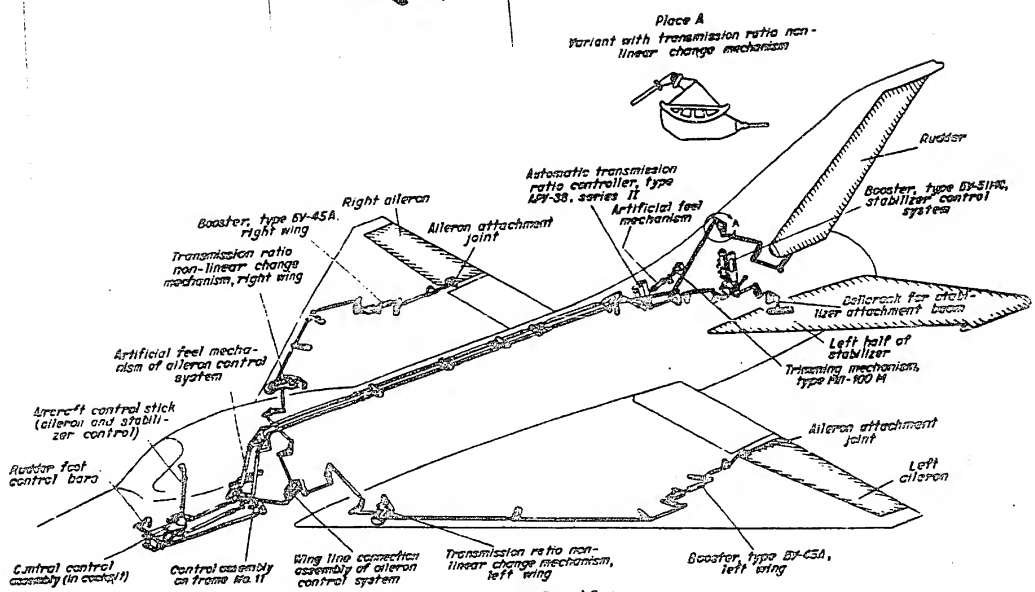

Fig. 205. Aircraft Control System

SECRET
NO FOREIGN DISSEM

50X1-HUM

POOR ORIGINAL

Sanitized Copy Approved for Release 2011/02/18 : CIA-RDP82-00038R001700250001-7

Sanitized Copy Approved for Release 2011/02/18 : CIA-RDP82-00038R001700250001-7

POOR ORIGINAL

50X1-HUM

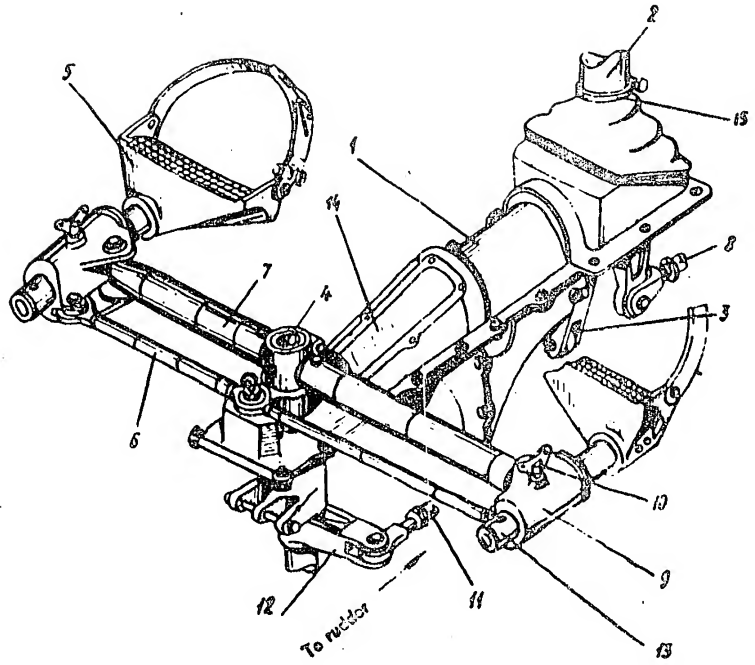

Fig.205. Central Control Assembly

1 – bracket; 2 – control stick; 3 – aileron control lever; 4 – axle; 5 – foot control bar; 6 – connecting rod; 7 – tube; 8 – stabilizer control rod; 9 – side bracket; 10 – adjusting screw; 11 – rudder control rod; 12 – lever; 13 – foot control bar stem; 14 – cover; 15 – collar.

Sanitized Copy Approved for Release 2011/02/18 : CIA-RDP82-00038R001700250001-7

Sanitized Copy Approved for Release 2011/02/18 : CIA-RDP82-00038R001700250001-7

50X1-HUM

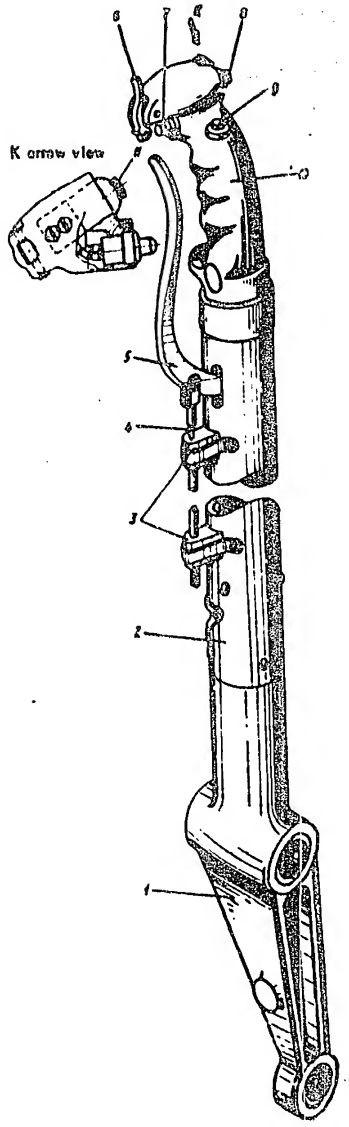

Fig. 207. Control Stick

1 – w Stiffner control lever; 2 – sleeve; 3 – cable attachment fittings; 4 – cable; 5 – wheel brake control lever; 6 – trigger; 7 – fire control button; 8 – sight damping button; 9 – air brake control button; 10 – grip; 11 – trimming mechanism control button.

POOR ORIGINAL

Sanitized Copy Approved for Release 2011/02/18 : CIA-RDP82-00038R001700250001-7

Sanitized Copy Approved for Release 2011/02/18 : CIA-RDP82-00038R001700250001-7

SECRET
NO FOREIGN DISSEM

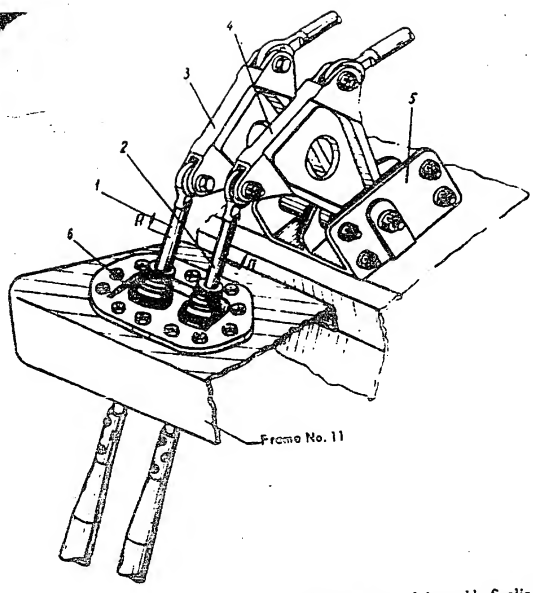

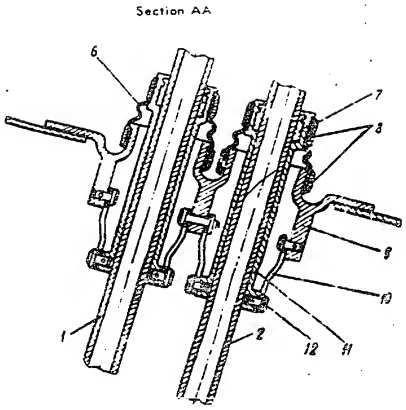

Fig.203. Control Assembly Sealing Arrangements

1 – stabilizer control rod; 2 – rudder control rod; 3 – bell-crank; 4 – bell-crank; 5 – bell-crank attachment bracket; 5 – sealing jacket; [illegible]
8 – wire binding; 9 – sealing arrangement bracket; 10 – brace; 11 – bushing; 12 – shaft.

SECRET
NO FOREIGN DISSEM

50X1-HUM

POOR ORIGINAL

Sanitized Copy Approved for Release 2011/02/18 : CIA-RDP82-00038R001700250001-7

Sanitized Copy Approved for Release 2011/02/18 : CIA-RDP82-00038R001700250001-7

SECRET
NO FOREIGN DISSEM

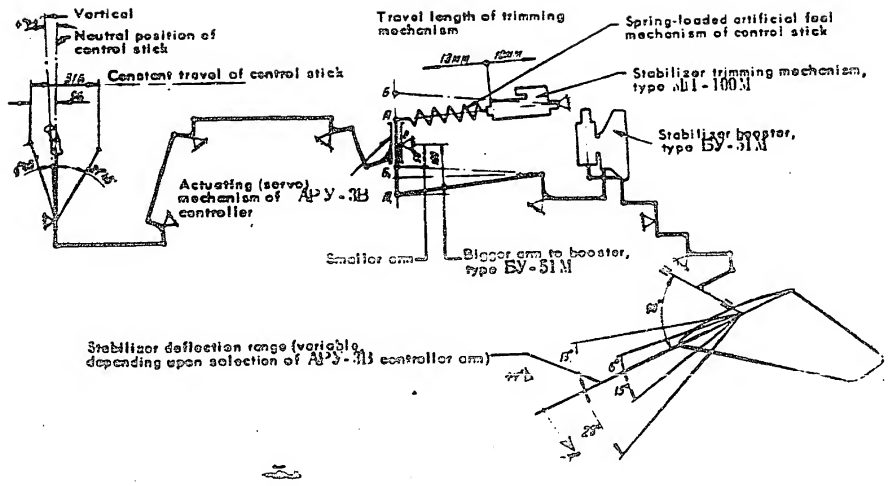

Fig. 209. Longitudinal Control Diagram

50X1-HUM

SECRET
NO FOREIGN DISSEM

POOR ORIGINAL

Sanitized Copy Approved for Release 2011/02/18 : CIA-RDP82-00038R001700250001-7

Sanitized Copy Approved for Release 2011/02/18 : CIA-RDP82-00038R001700250001-7

SECRET
NO FOREIGN DISSEM

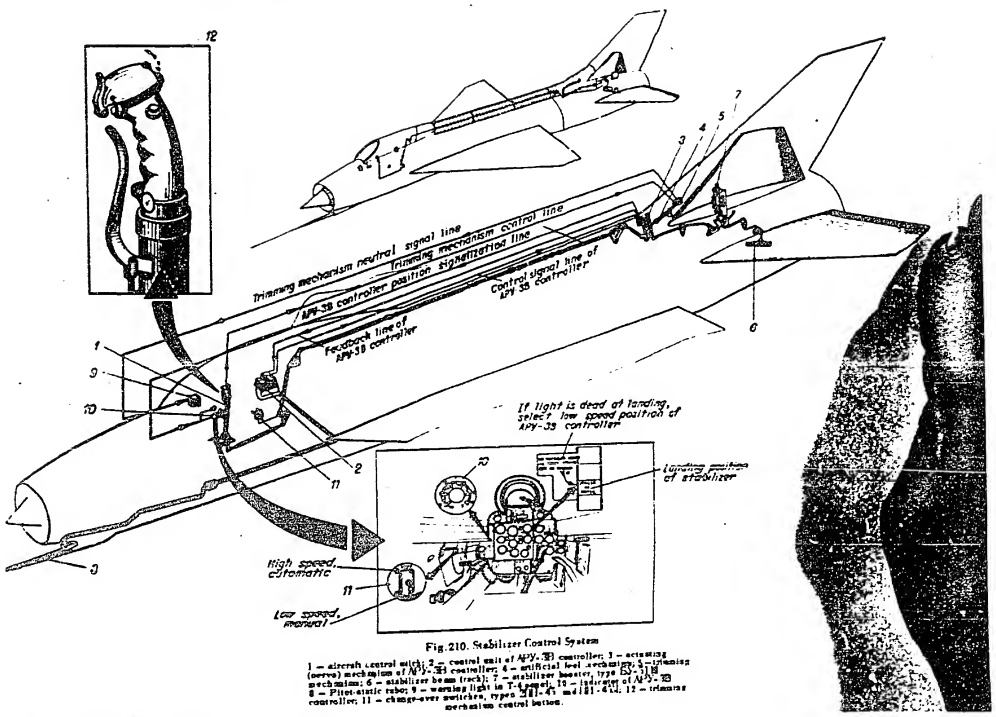

Fig.210. Stabilizer Control System

1 — aircraft control stick; 2 — control unit of APY-33 controller; 3 — actuating (servo) mechanism of APY-33 controller; 4 — artificial feel mechanism; 5 — trimming mechanism; 6 — stabilizer beam (rack); 7 — stabilizer booster, type BU-118 8 — Pitot-static tube; 9 — warning light in T-6 panel; 10 — indicator of APY-33 controller; 11 — change-over switches, types [illegible]-45 and [illegible]-414; 12 — trimming mechanism control button.

SECRET
NO FOREIGN DISSEM

50X1-HUM

POOR ORIGINAL

Sanitized Copy Approved for Release 2011/02/18 : CIA-RDP82-00038R001700250001-7

Sanitized Copy Approved for Release 2011/02/18 : CIA-RDP82-00038R001700250001-7

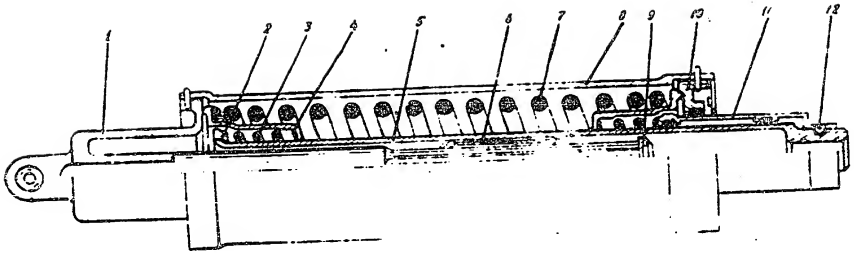

Fig.211. Artificial Feel Mechanism of Stabilizer Control System
1 – axle; 2 – washer; 3 – spring; 4 – support ring; 5 – rod; 6 – separator; 7 – spring; 8 – cylinder; 9 – nut; 10 – cap; 11 – bushing; 12 – screw.

SECRET
NO FOREIGN DISSEM

50X1-HUM

POOR ORIGINAL

Sanitized Copy Approved for Release 2011/02/18 : CIA-RDP82-00038R001700250001-7

Sanitized Copy Approved for Release 2011/02/18 : CIA-RDP82-00038R001700250001-7

SECRET
NO FOREIGN DISSEM

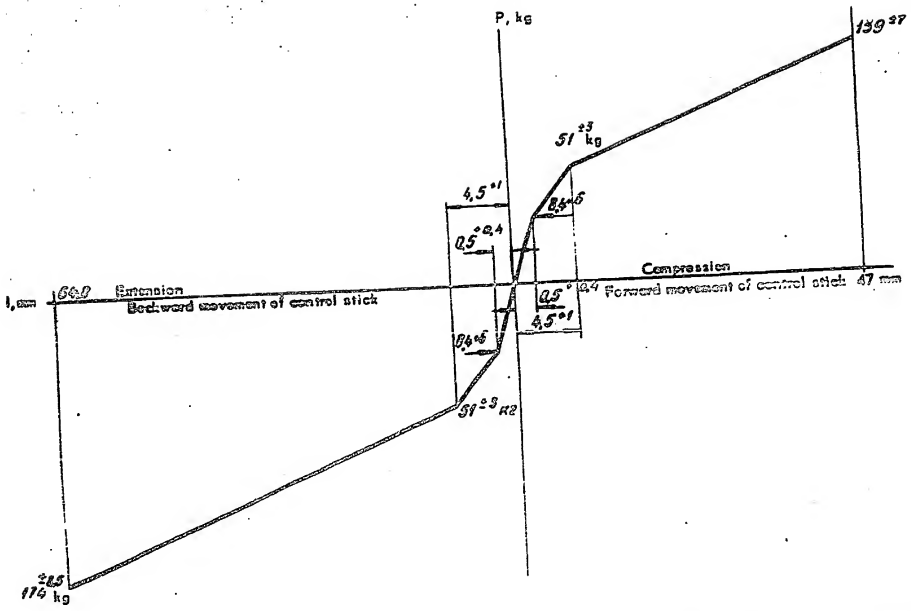

Fig.212. Characteristic Curve of Spring Set of Stabilizer System Artificial Feel Mechanism

SECRET
NO FOREIGN DISSEM

50X1-HUM

POOR ORIGINAL

Sanitized Copy Approved for Release 2011/02/18 : CIA-RDP82-00038R001700250001-7

Sanitized Copy Approved for Release 2011/02/18 : CIA-RDP82-00038R001700250001-7

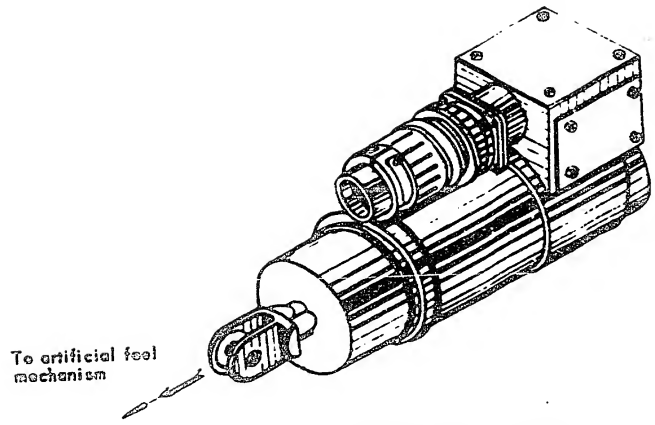

Fig.213. Trimming Effect Mechanism of Stabilizer Control System

50X1-HUM

POOR ORIGINAL

Sanitized Copy Approved for Release 2011/02/18 : CIA-RDP82-00038R001700250001-7

Sanitized Copy Approved for Release 2011/02/18 : CIA-RDP82-00038R001700250001-7

SECRET
NO FOREIGN DISSEM

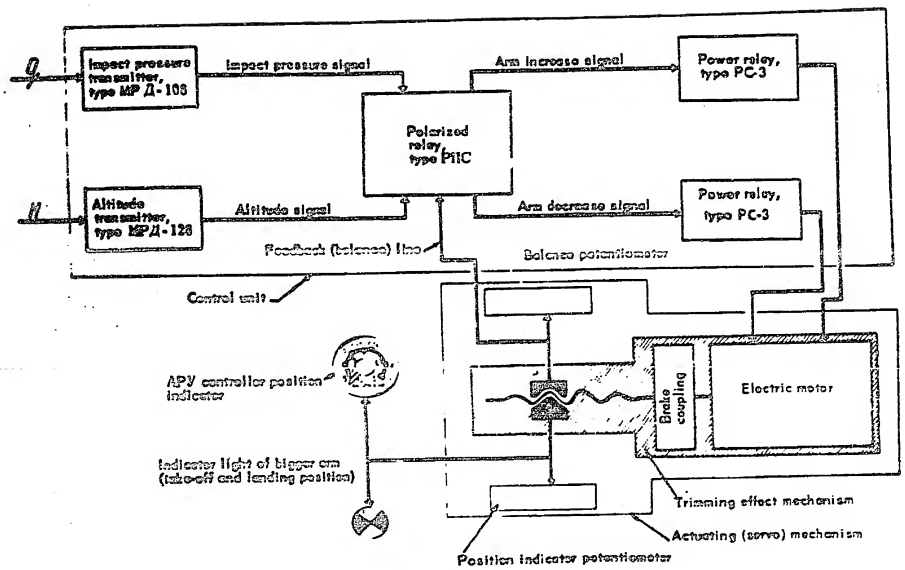

Fig.214. Diagram of APУ-3B Controller Units

SECRET
NO FOREIGN DISSEM

50X1-HUM

POOR ORIGINAL

Sanitized Copy Approved for Release 2011/02/18 : CIA-RDP82-00038R001700250001-7

Sanitized Copy Approved for Release 2011/02/18 : CIA-RDP82-00038R001700250001-7

50X1-HUM

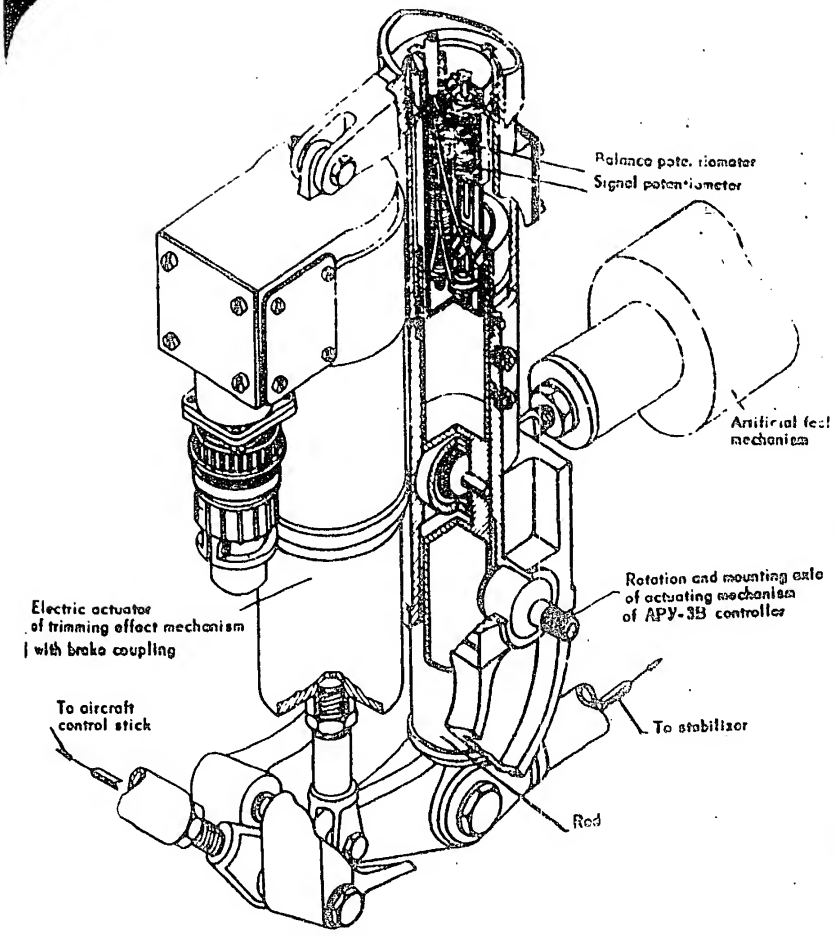

Fig.215. Actuating (Servo) Mechanism of APY-3B Controller

POOR ORIGINAL

Sanitized Copy Approved for Release 2011/02/18 : CIA-RDP82-00038R001700250001-7

Sanitized Copy Approved for Release 2011/02/18 : CIA-RDP82-00038R001700250001-7

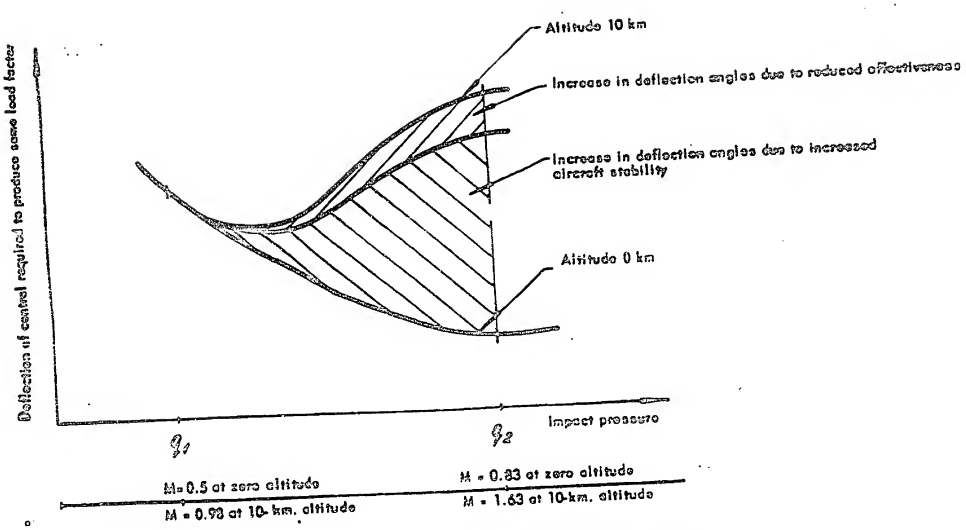

Fig.216. Aircraft Control Vs Impact Pressure, Static Stability Margin and Stabilizer Effectiveness

50X1-HUM

POOR ORIGINAL

Sanitized Copy Approved for Release 2011/02/18 : CIA-RDP82-00038R001700250001-7

Sanitized Copy Approved for Release 2011/02/18 : CIA-RDP82-00038R001700250001-7

SECRET
NO FOREIGN DISSEM

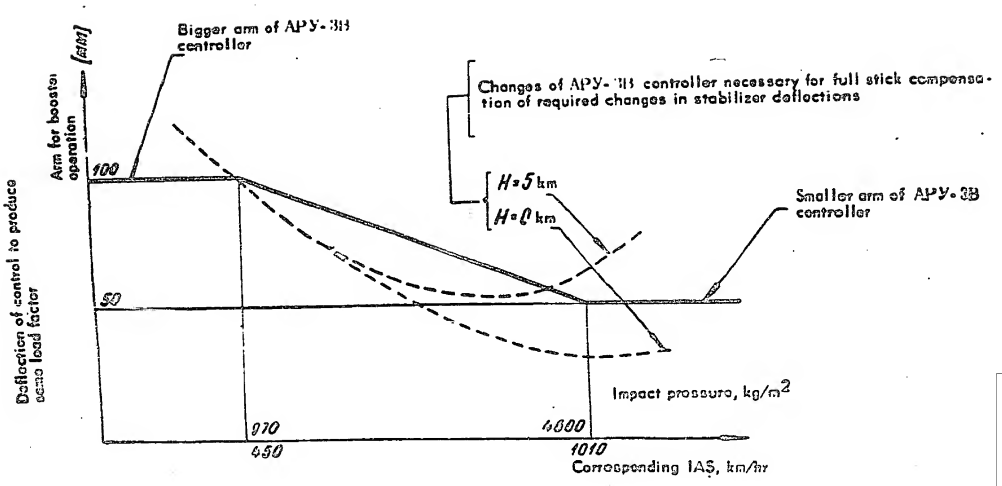

Fig.217. APУ-3B Arm for Booster Operation Vs Impact Pressure at Altitudes from 0 to 5 km

SECRET
NO FOREIGN DISSEM

50X1-HUM

POOR ORIGINAL

Sanitized Copy Approved for Release 2011/02/18 : CIA-RDP82-00038R001700250001-7

Sanitized Copy Approved for Release 2011/02/18 : CIA-RDP82-00038R001700250001-7

SECRET
NO FOREIGN DISSem

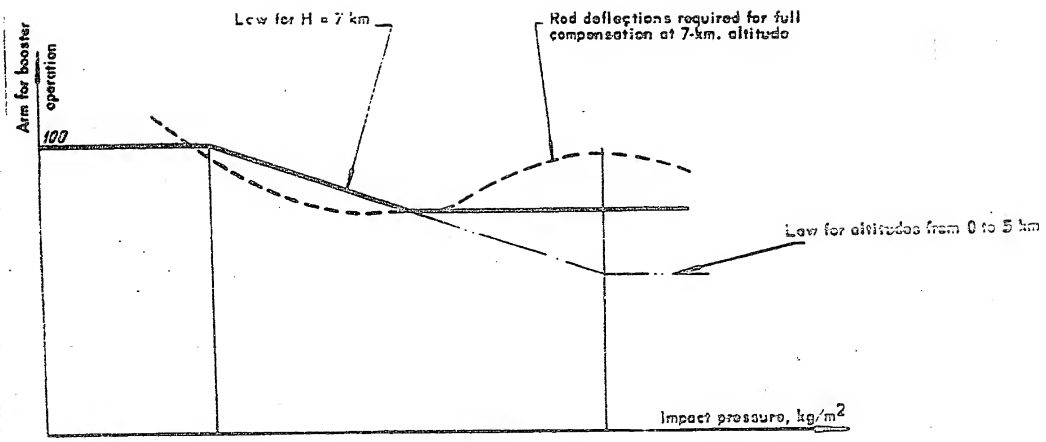

Fig.216. АРУ-3В Arm for Booster Operation Vs Impact Pressure at Altitude of 7 km.

50X1-HUM

SECRET
NO FOREIGN DISSEM

POOR ORIGINAL

Sanitized Copy Approved for Release 2011/02/18 : CIA-RDP82-00038R001700250001-7

Sanitized Copy Approved for Release 2011/02/18 : CIA-RDP82-00038R001700250001-7

SECRET
NO FOREIGN DISSEM

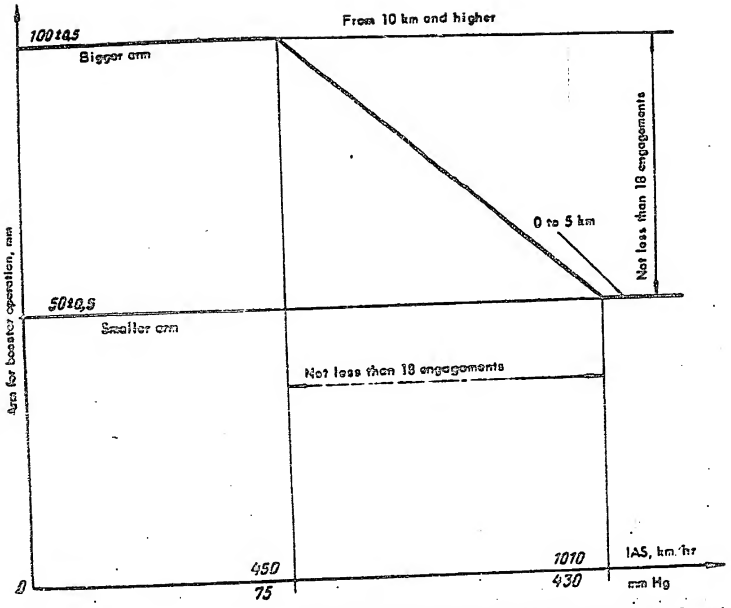

Fig.219. Assumed Law for Adjusting APY-3B Controller Actuating Mechanism Rod for Booster Operation

SECRET
NO FOREIGN DISSEM

50X1-HUM

POOR ORIGINAL

Sanitized Copy Approved for Release 2011/02/18 : CIA-RDP82-00038R001700250001-7

Sanitized Copy Approved for Release 2011/02/18 : CIA-RDP82-00038R001700250001-7

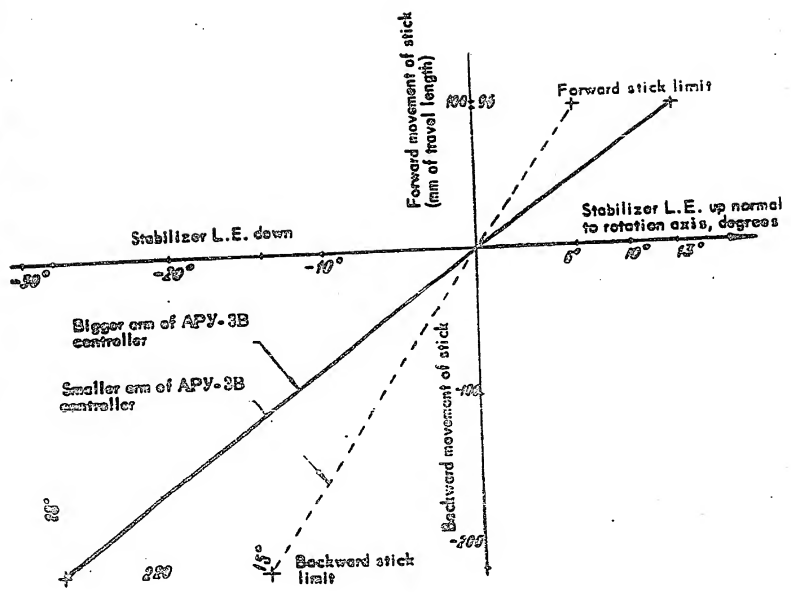

Fig.220. Stabilizer Deflection Angle as Function of Direction of Control Stick Deflection

SECRET
NO FOREIGN DISSEM

50X1-HUM

POOR ORIGINAL

Sanitized Copy Approved for Release 2011/02/18 : CIA-RDP82-00038R001700250001-7

Sanitized Copy Approved for Release 2011/02/18 : CIA-RDP82-00038R001700250001-7

50X1-HUM

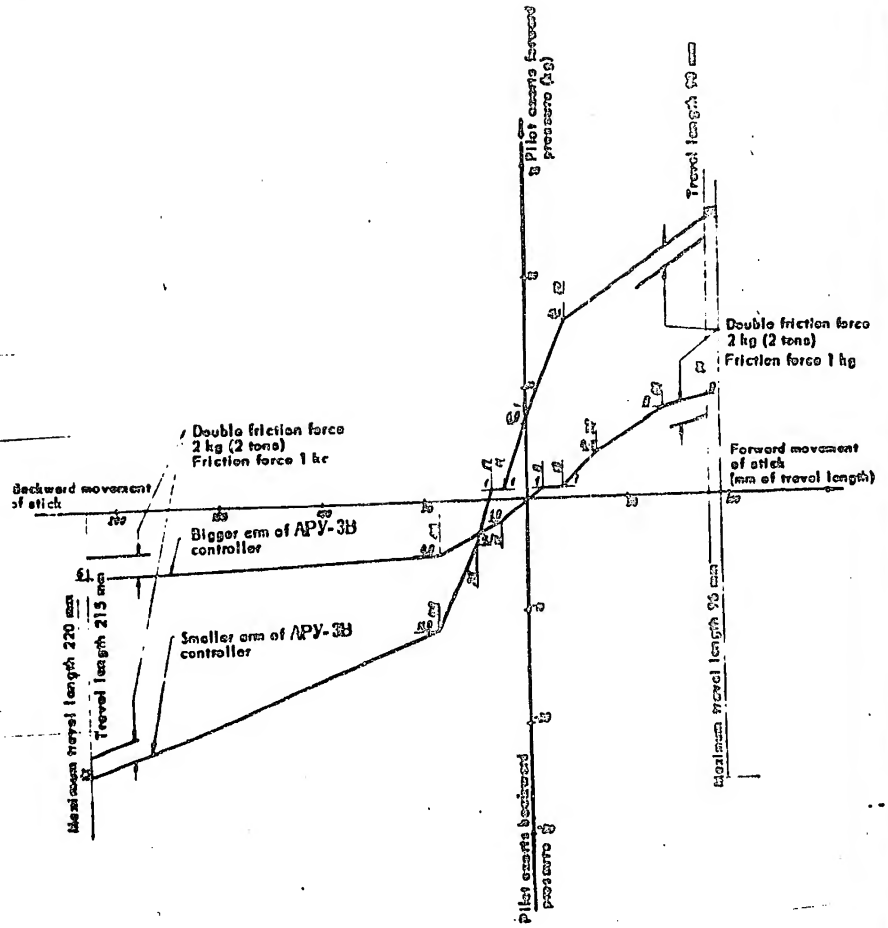

Fig.221. Stabilizer Deflection Angle Vs Stick Loading and Pressure in Off-Neutral Position

POOR ORIGINAL

Sanitized Copy Approved for Release 2011/02/18 : CIA-RDP82-00038R001700250001-7

Sanitized Copy Approved for Release 2011/02/18 : CIA-RDP82-00038R001700250001-7

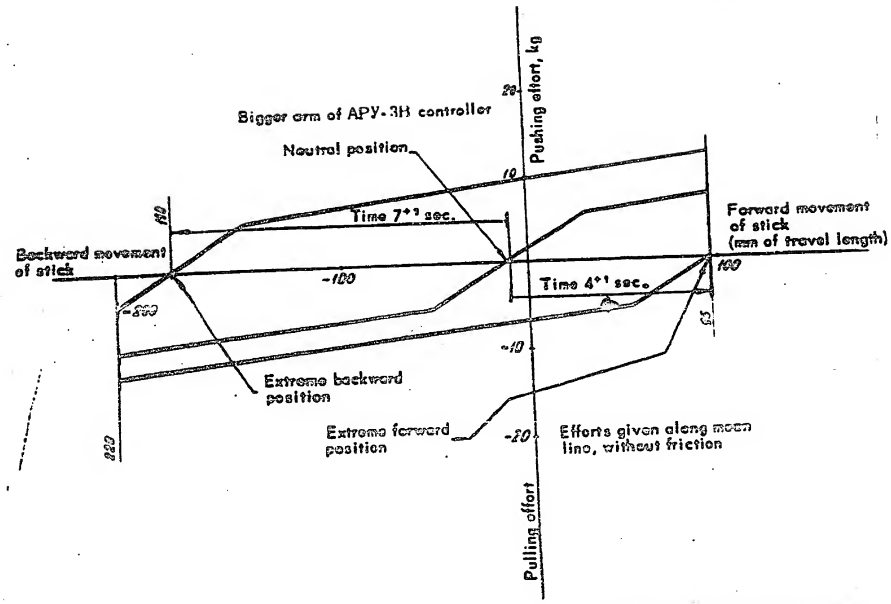

Fig.222. Range and Time of Stick Pressure Variations at Full Travel Length of Trimming Mechanism from Neutral Position with Bigger Arm of APУ-3B Controller

50X1-HUM

POOR ORIGINAL

Sanitized Copy Approved for Release 2011/02/18 : CIA-RDP82-00038R001700250001-7

Sanitized Copy Approved for Release 2011/02/18 : CIA-RDP82-00038R001700250001-7

50X1-HUM

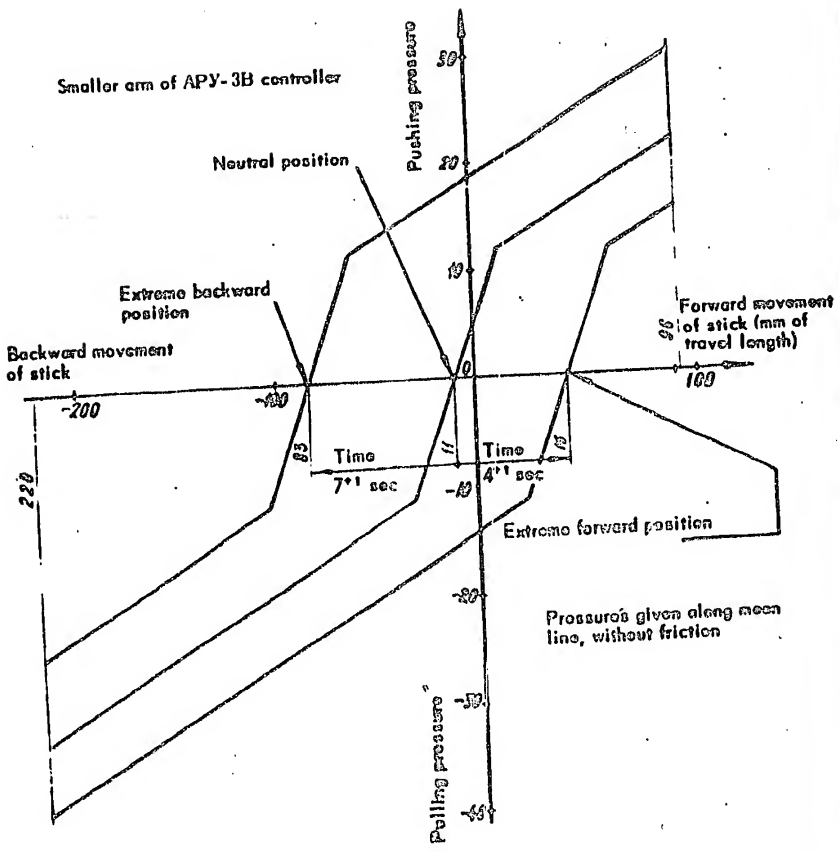

Fig.223. Range and Time of Stick Pressure Variations at Full Travel Length of Trimming Mechanism Rod with Smaller Arm of APУ-3B Controller

POOR ORIGINAL

Sanitized Copy Approved for Release 2011/02/18 : CIA-RDP82-00038R001700250001-7

Sanitized Copy Approved for Release 2011/02/18 : CIA-RDP82-00038R001700250001-7

POOR ORIGINAL

50X1-HUM

Means of checking APY controller automatic operation	Flight procedures
① 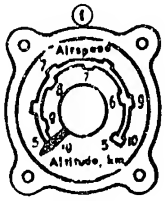 Pointer on left stop Landing position of stabilizer Indicator light in T-4 panel burns	Flying at IAS lower than 450 km/hr, all altitudes Flying at IAS beyond 450 km/hr, and 10-km altitude or higher In landing approach
② 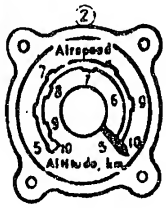 Pointer on right stop Landing position of stabilizer Indicator light on T-4 panel is dead	Flying at IAS beyond 1010 km/hr, at altitudes from 0 to 5 km
③ 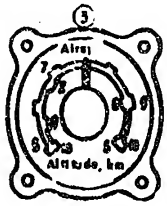 Pointer in mid-scale position Landing position of stabilizer Indicator light on T-4 panel is dead	Flying at IAS beyond 750 km/hr at 7-km altitude

Fig.224 Position Indicator of APY-3B Controller

Sanitized Copy Approved for Release 2011/02/18 : CIA-RDP82-00038R001700250001-7

Sanitized Copy Approved for Release 2011/02/18 : CIA-RDP82-00038R001700250001-7

SECRET
NO FOREIGN DISSEM

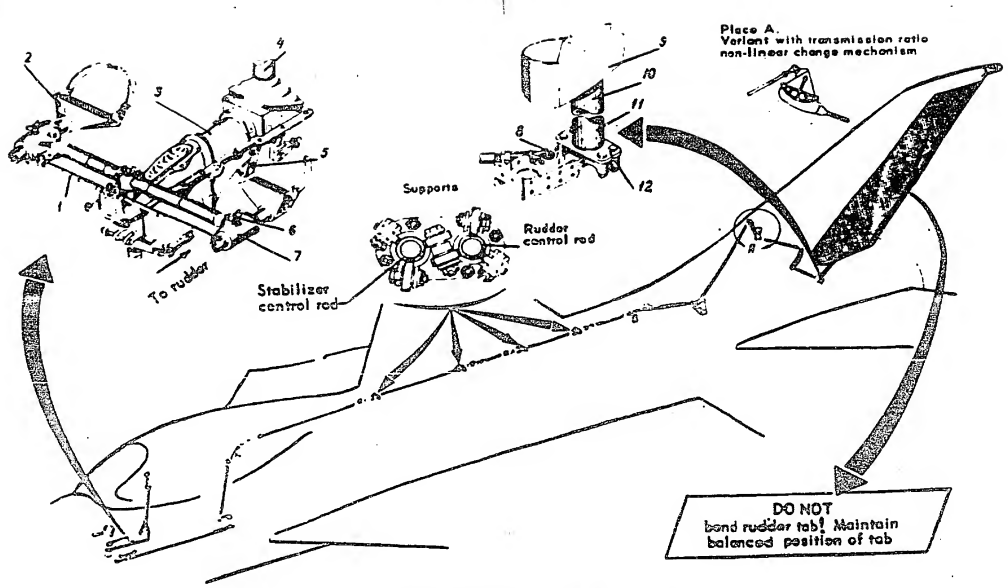

Fig.225. Rudder Control System

1 – connecting rod; 2 – foot control bar; 3 – bracket; 4 – aircraft control stick; 5 – aileron control lever; 6 – adjusting bolt; 7 – side bracket; 8 – bell-crank; 9 – rudder; 10 – axle; 11 – lower rudder attachment joint; 12 – bracket.

SECRET
NO FOREIGN DISSEM

50X1-HUM

POOR ORIGINAL

Sanitized Copy Approved for Release 2011/02/18 : CIA-RDP82-00038R001700250001-7

Sanitized Copy Approved for Release 2011/02/18 : CIA-RDP82-00038R001700250001-7

SECRET
NO FOREIGN DISSEM

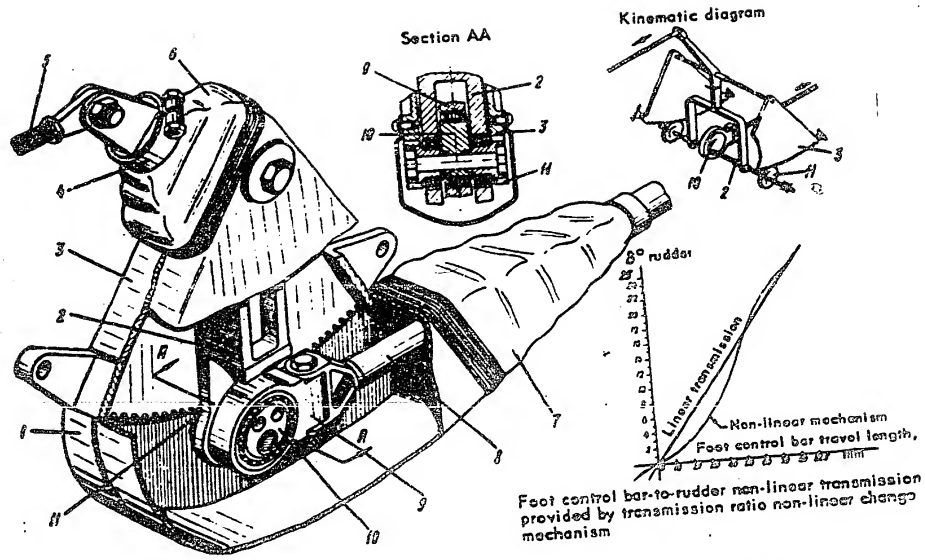

Fig.226. Foot Control Bar-to-Rudder Transmission Ratio Non-Linear Change Mechanism
1 – cone; 2 – bell-crank; 3 – bracket with toothed sector; 4 – yoke; 5 – control rod; 6 – sealing jacket; 7 – sealing jacket; 8 – control rod; 9 – eyelug; 10 – eccentric; 11 – gear.

50X1-HUM

POOR ORIGINAL

Sanitized Copy Approved for Release 2011/02/18 : CIA-RDP82-00038R001700250001-7

Sanitized Copy Approved for Release 2011/02/18 : CIA-RDP82-00038R001700250001-7

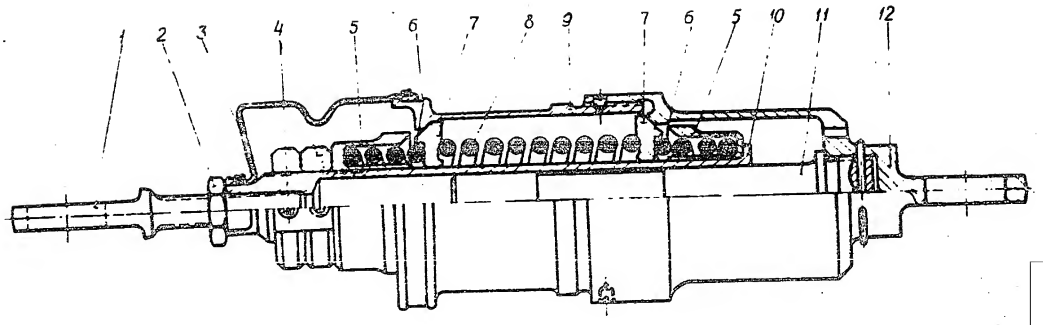

Fig. 220. Artificial Feel Mechanism of Aileron Control System

1 – eyebolt; 2 – nut; 3 – sealing jacket; 4 – nut; 5 – sleeve; 6 – spring; 7 – thrust washer; 8 – spring; 9 – case; 10 – rod; 11 – axle; 12 – case.

SECRET
NO FOREIGN DISSEM

50X1-HUM

POOR ORIGINAL

Sanitized Copy Approved for Release 2011/02/18 : CIA-RDP82-00038R001700250001-7

Sanitized Copy Approved for Release 2011/02/18 : CIA-RDP82-00038R001700250001-7

SECRET
NO FOREIGN DISSEM

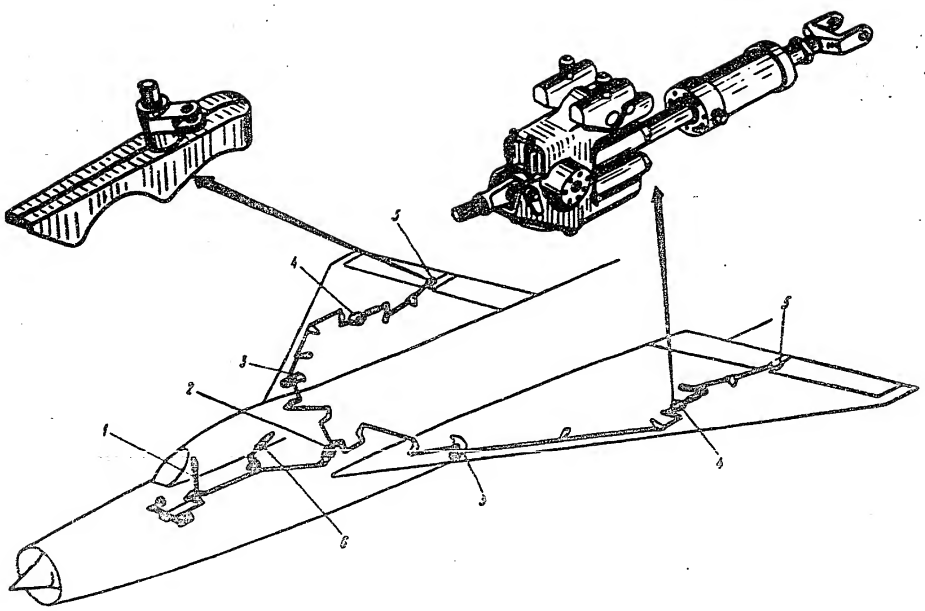

Fig.227. Aileron Control System

1 – aircraft control stick; 2 – wing line connection assembly of aileron control system; 3 – transmission ratio non-linear change mechanism; 4 – booster, type BY-45; 5 – aileron attachment joint; 6 – artificial feel mechanism.

50X1-HUM

SECRET
NO FOREIGN DISSEM

POOR ORIGINAL

Sanitized Copy Approved for Release 2011/02/18 : CIA-RDP82-00038R001700250001-7

Sanitized Copy Approved for Release 2011/02/18 : CIA-RDP82-00038R001700250001-7

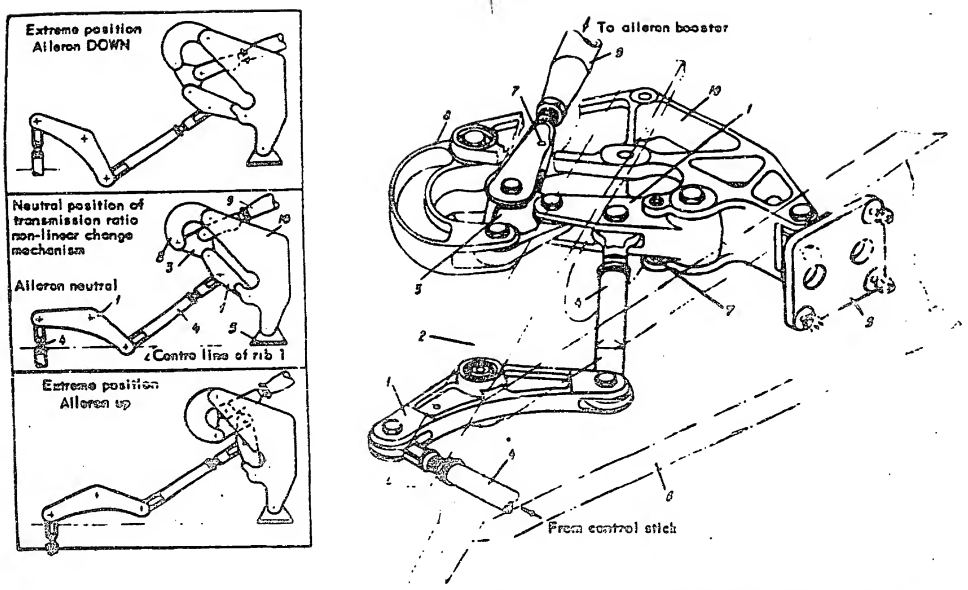

Fig.229. Transmission Ratio Non-Linear Change Mechanism of Aileron Control System
1 – bell-crank; 2 – front stringer; 3 – link; 4 – control rod; 5 – bracket; 6 – rib 1; 7 – holes for locking the mechanism in neutral position during control adjustment; 8 – bell-crank; 9 – control rod; 10 – bracket.

50X1-HUM

POOR ORIGINAL

Sanitized Copy Approved for Release 2011/02/18 : CIA-RDP82-00038R001700250001-7

Sanitized Copy Approved for Release 2011/02/18 : CIA-RDP82-00038R001700250001-7

POOR ORIGINAL

50X1-HUM

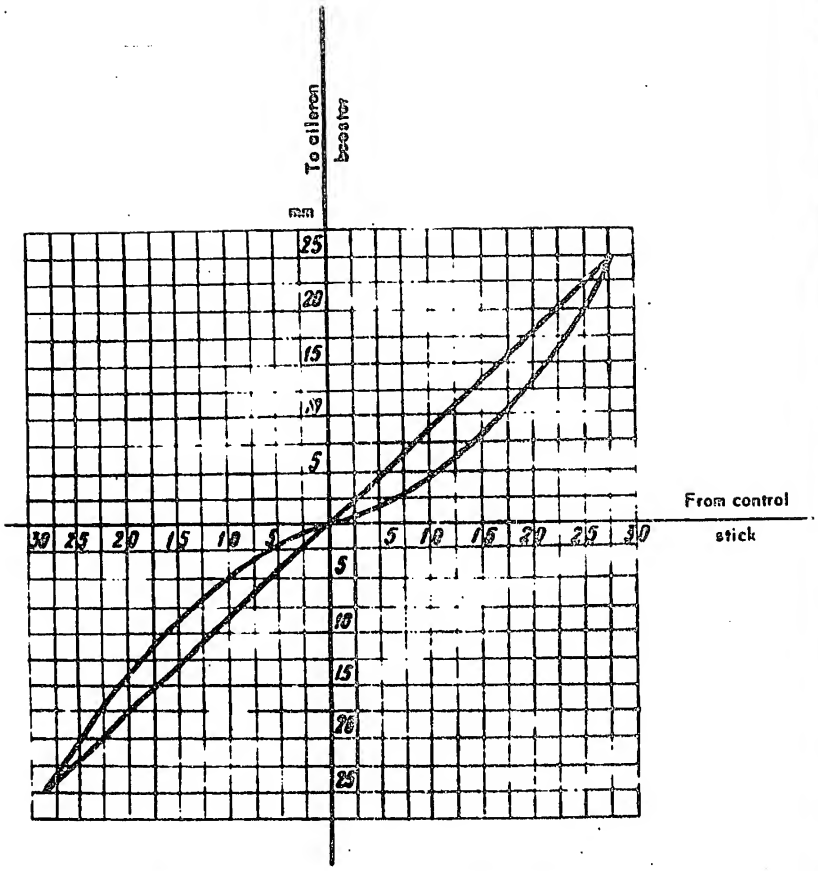

Fig. 230. Functional Curve of Transmission Ratio Non-Linear Change Mechanism of Aileron Control System

Sanitized Copy Approved for Release 2011/02/18 : CIA-RDP82-00038R001700250001-7

Sanitized Copy Approved for Release 2011/02/18 : CIA-RDP82-00038R001700250001-7

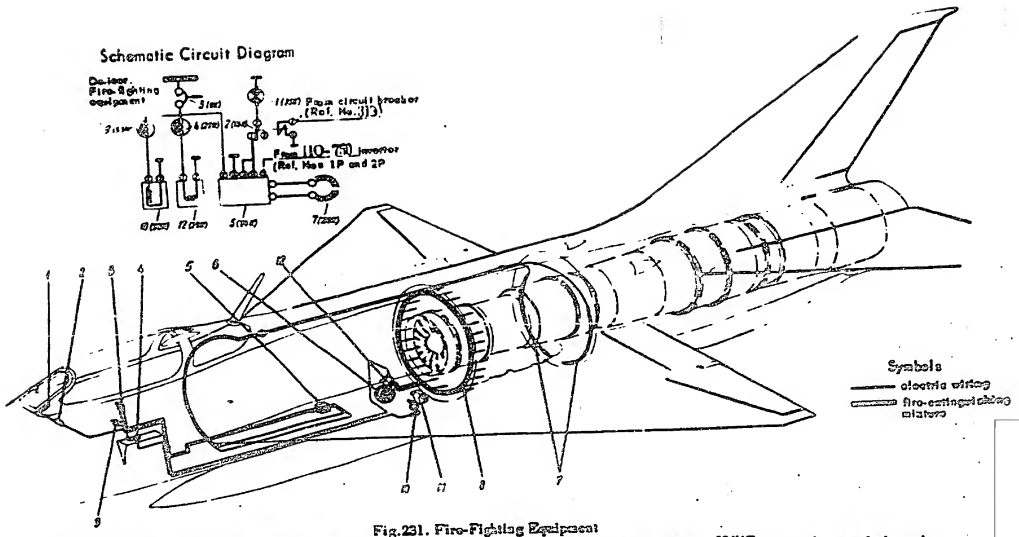

Fig.231. Fire-Fighting Equipment

1 – warning lamps; 2 – ТКЕ-56ПД lamp panel control relay; 3 – circuit breaker АЗС-5; 4 – 20ЖС fire button; 5 – ИС2М electronic amplifier; 6 – 2ЗС-2-1С fire-extinguishing cylinder; 7 – ion fire detector assembly; 8 – discharge ring; 9 – 20ЖС button of engine fuel supply cut-off cock; 10 – 6Б5000М electropneumatic valve; 11 – fuel system cross-feed cock; 12 – equip of 2ЗС-3-1С fire-extinguishing cylinder.

SECRET
NO FOREIGN DISSEM

50X1-HUM

POOR ORIGINAL

Sanitized Copy Approved for Release 2011/02/18 : CIA-RDP82-00038R001700250001-7

Sanitized Copy Approved for Release 2011/02/18 : CIA-RDP82-00038R001700250001-7

SECRET
NO FOREIGN DISSEM

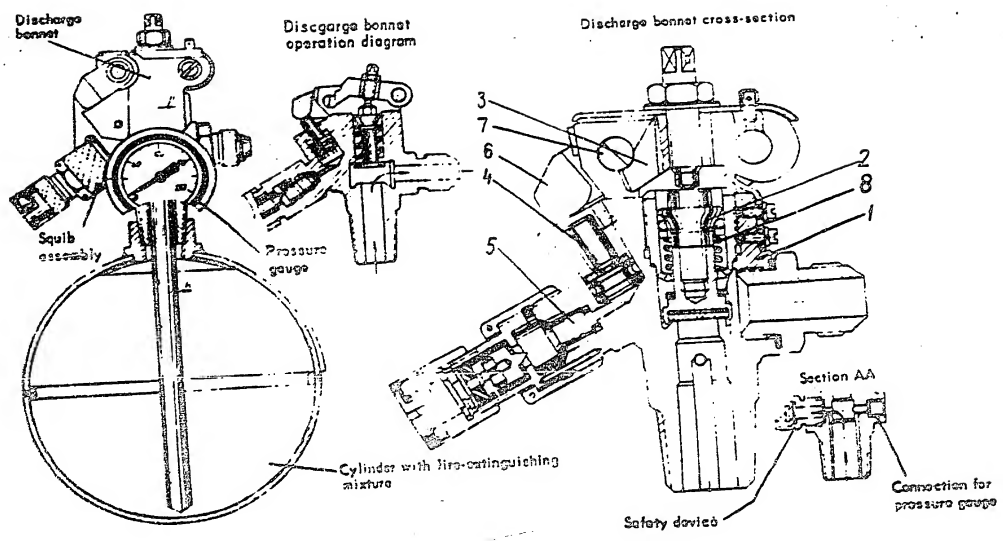

Fig. 232. Fire-Extinguishing Cylinder with Discharge Bonnet

1 — discharge bonnet body; 2 — valve; 3 — lever; 4 — piston; 5 — squib; 6 — lever; 7 — axle; 8 — spring.

SECRET
NO FOREIGN DISSEM

50X1-HUM

POOR ORIGINAL

Sanitized Copy Approved for Release 2011/02/18 : CIA-RDP82-00038R001700250001-7

Sanitized Copy Approved for Release 2011/02/18 : CIA-RDP82-00038R001700250001-7

SECRET
NO FOREIGN DISSEM

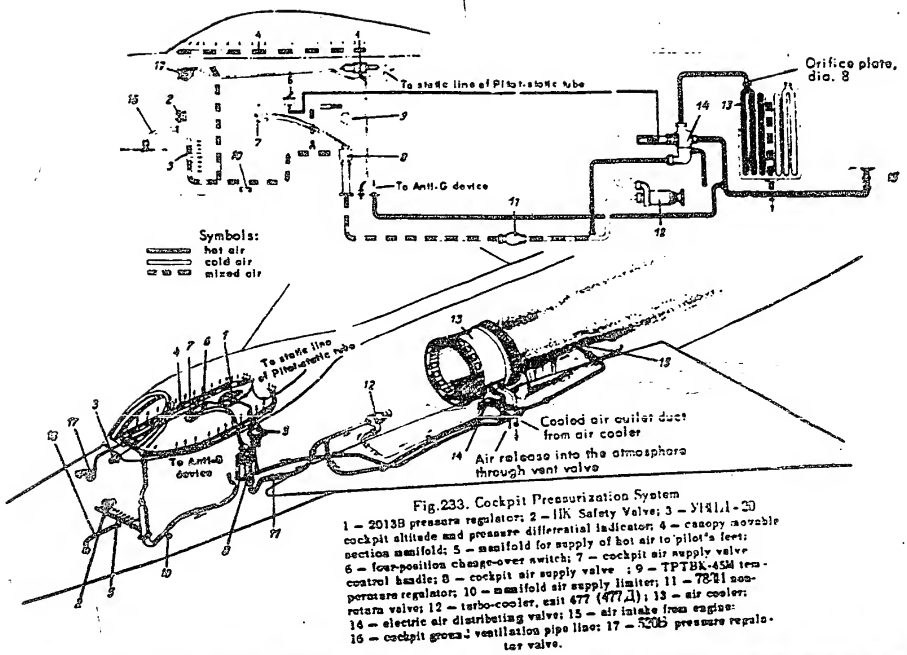

Fig.233. Cockpit Pressurization System

1 – 2013B pressure regulator; 2 – IIK Safety Valve; 3 – 5181.1-20 cockpit altitude and pressure differential indicator; 4 – canopy movable section manifold; 5 – manifold for supply of hot air to pilot's feet; 6 – four-position change-over switch; 7 – cockpit air supply valve control handle; 8 – cockpit air supply valve ; 9 – TPTBK-45M temperature regulator; 10 – manifold air supply limiter; 11 – 7871 non-return valve; 12 – turbo-cooler, unit 477 (477.A) ; 13 – air cooler; 14 – electric air distributing valve; 15 – air intake from engine; 16 – cockpit ground ventilation pipe line; 17 – 520B pressure regulator valve.

50X1-HUM

POOR ORIGINAL

Sanitized Copy Approved for Release 2011/02/18 : CIA-RDP82-00038R001700250001-7

Sanitized Copy Approved for Release 2011/02/18 : CIA-RDP82-00038R001700250001-7

SECRET
NO FOREIGN DISS.

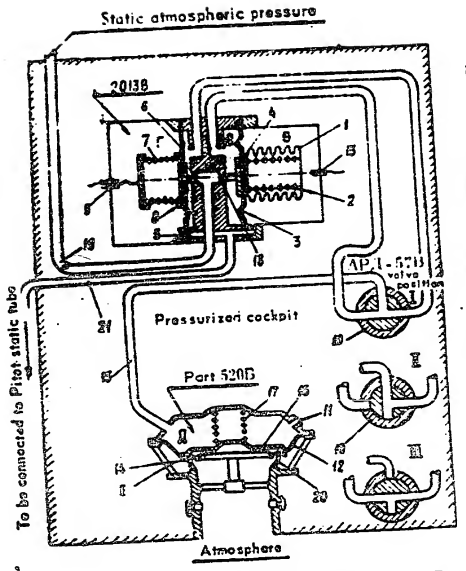

Positions of Pressure Regulator Valve

Position I – ON (ВКЛЮЧЕНО)

Valve is cut in before flight. From 0 to 2 km – ventilation. From 2 km. to 9-12 km. – excessive pressure rise up to 220 ± 10 mm of mercury. From 9 to 12 km. – constant excessive pressure of 220 ± 10 mm of mercury.

Position II – CHECK (ПРОВЕРКА)

Valve is cut in for cockpit ground operation at constant excessive pressure of 220 ± 10 mm of mercury.

Position III – OFF (ВЫКЛЮЧЕНО)

Valve is cut in for checking cockpit airtightness. Cockpit air outlet duct is closed.

Fig.234. АРД-57В Pressure Regulator

1 – sylphon; 2 – spring; 3 – diaphragm; 4 – valve; 5 – capillary tube; 6 – diaphragm; 7 – spring; 8 – valve; 9 – screw; 10 – valve; 11 – orifice; 12 – diaphragm; 13 – screw; 14 – supporting disk; 15 – tube; 16 – bottom of valve disk; 17 – spring; 18 – orifice in pressure regulator; 19 – tube; 20 – valve; 21 – tube.

SECRET
NO FOREIGN DISS.
50X1-HUM

POOR ORIGINAL

Sanitized Copy Approved for Release 2011/02/18 : CIA-RDP82-00038R001700250001-7

Sanitized Copy Approved for Release 2011/02/18 : CIA-RDP82-00038R001700250001-7

50X1-HUM

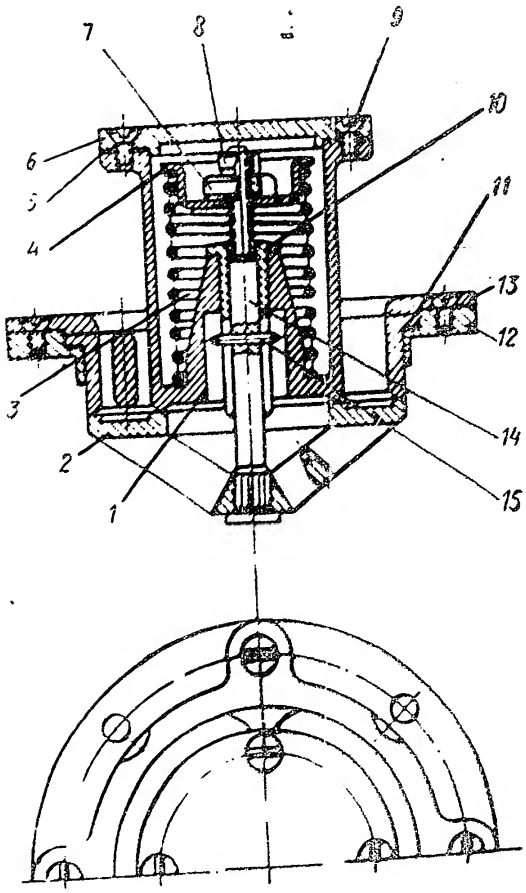

Fig. 235. Safety Valve

1 — body; 2 — valve; 3 — spring; 4 — washer; 5 — gasket; 6 — cover; 7 — nut; 8 — lock nut; 9 — screw; 10 — bushing; 11 — gasket; 12 — flange; 13 — ring; 14 — rod; 15 — pin.

POOR ORIGINAL

Sanitized Copy Approved for Release 2011/02/18 : CIA-RDP82-00038R001700250001-7

Sanitized Copy Approved for Release 2011/02/18 : CIA-RDP82-00038R001700250001-7

POOR ORIGINAL

50X1-HUM

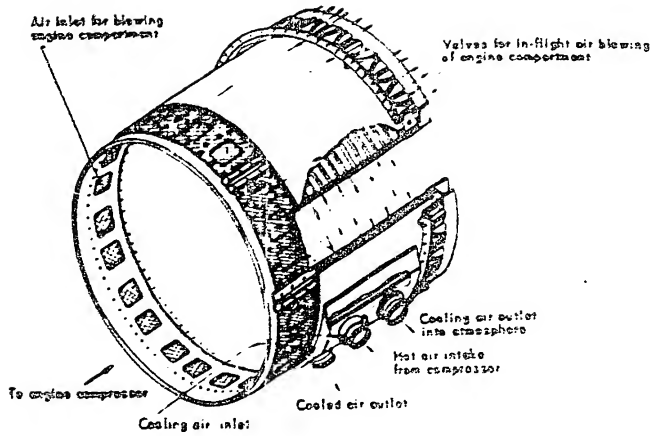

Fig. 236. Air Cooler

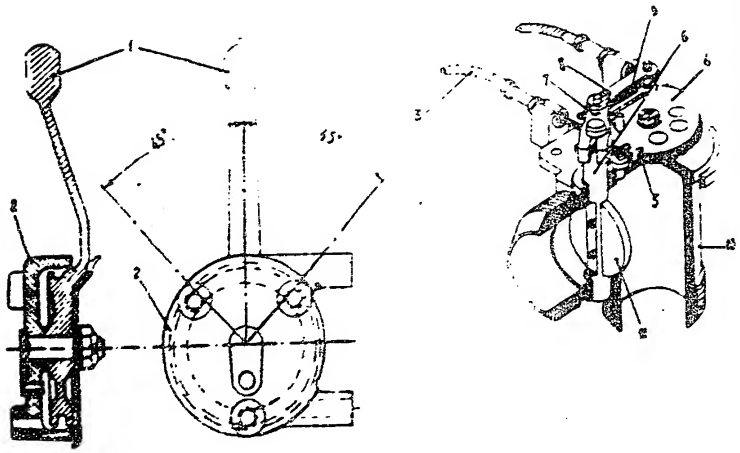

Fig. 237. Cockpit Air Supply Valve

1 – valve control handle; 2 – control body; 3 – bowden cable; 4 – rollers; 5 – cylinder; 6 – pin; 7 – guide; 8 – rod; 9 – spring; 10 – shut-off valve; 11 – shutter.

Sanitized Copy Approved for Release 2011/02/18 : CIA-RDP82-00038R001700250001-7